YAMAHA

SPECIAL TOOLS CATALOG

—for—

MOTORCYCLES AND SNOWMOBILES
INCLUDES 1975 MODELS

LIT-11640-01-74

INTRODUCTION

Special tools are no luxury; they are an essential part of a truly professional Service Department. Each tool in this catalog is designed to aid in engine disassembly, assembly, adjustment, or measurement. Without the proper special tools, a mechanic would have to resort to "shade-tree" methods to affect a rapid repair. This would, at best, be poor practice, and could cause further damage to the motorcycle.

This Special Tools Catalog supercedes all previous catalogs and contains information using the 12-digit numbering system. An index in the back of the book gives tools in alphabetical order.

TO USE THIS CATALOG, turn to the Table of Contents on the following page. All special tools are listed and grouped according to the area of the motorcycle on which they are applied.

Please note that pages containing tools for individual models have each model listed above a column (see below). Whenever new models are released, a Technical Bulletin will be issued providing sufficient new tool data to keep your Special Tools Catalog up-to-date.

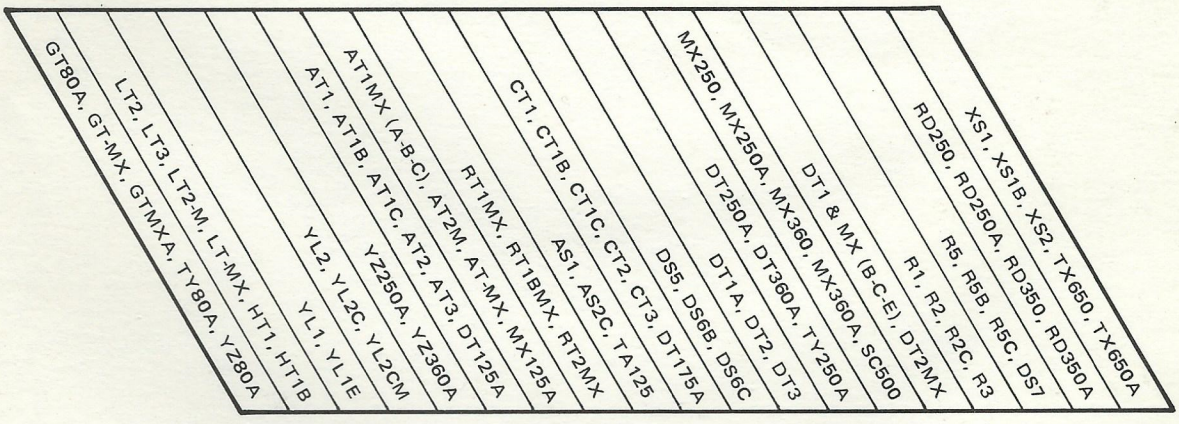

SPECIAL TOOLS CATALOG
4th EDITION JULY 1974
Yamaha International Corporation
Buena Park, California 90620
LIT 11640-01-74

TABLE OF CONTENTS

ELECTRICAL TEST INSTRUMENTS Page

Electro Tester 1
CDI Ignition Tester 1
CDI Ignition Tester Operation Manual . . 1
Pocket Tester 1
Point Checker 1
Selenium Rectifier Checker 1

PRECISION TOOLS

Vernier Caliper 2
Micrometers 2
Cylinder Gauges 2
Dial Gauge 2
Dial Gauge Accessories 2
Autolube Feeler Gauge 2
Hydrometer 2
Cylinder Honing Kit 2
Honing Stone Sets 2
Taps and Dies 3
Reamers 3
Spark Plug Thread Repair Tool Kit 3
Spark Plug Thread Inserts 3

COMMON HAND TOOLS

Circlip Pliers 4
T-Handle Screwdrivers 4
T-Handle Socket Wrenches 4
Spoke Wrench Set 4

CLUTCH HOLDING TOOLS 5

FRONT FORK TOOLS 5

ARMATURE & MAGNETO TOOLS

Slide Hammer Armature Puller Set 6
Magneto Holding Tool 6
Magneto Pullers 6
Rotor Pullers 6

MISCELLANEOUS TOOLS Page

Crankcase Separating Tools 7
Exhaust Ring Nut Wrench 7
Oil Window Nut Tool 7
Speedo Bushing Removal Tool 7
Steering Nut Wrench 7
Rod Bushing Pullers 7
Crankcase Pressure Tester 7
Impact Driver Set 7
Engine Stand 7

SEALANTS & CLEANERS 8

CRANKSHAFT TOOLS

Crankshaft Separators 9
Crankshaft Jig Assembly (D-Type) 9
Crankshaft Press Stops 9
R-Type Crankshaft Rebuilding Kit 9
Universal Crankshaft Installing Set 9
Crankshaft Installing Bolt Adaptors . . . 9
Individual Crankshaft Installing Tools . . . 9a

TX500/A, XS500B SPECIAL TOOLS 10

650cc SPECIAL TOOLS 11

TX750/A SPECIAL TOOLS 12

MONOCROSS SUSPENSION TOOLS 13

SNOWMOBILE SPECIAL TOOLS 15

APPENDICES

A. Use of Universal Crankshaft Installing Set 16
B. Use of D-Type Crankshaft Rebuilding Tools 17
C. Use of R-Type Crankshaft Rebuilding Kit 21

INDEX 23

ELECTRICAL TEST INSTRUMENTS

ELECTRO TESTER

1

A compact tester capable of performing all electrical tests required on motorcycles and snowmobiles. Will check AC and DC voltages, DC current to 100 amperes, resistance, insulation, ignition coil, condenser, and continuity by indicator light. A timing light is included.

CDI IGNITION TESTER

2

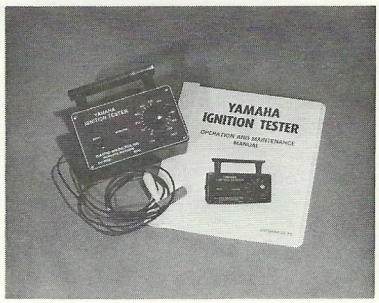

This tester is designed to quickly isolate defective CDI ignition components. It will also indicate weak components which may cause hard starting or intermittent ignition failure. The Operation and Maintenance Manual (included) contains specific hook-up and step-by-step procedures for all Yamaha motorcycles and snowmobiles with CDI.

POCKET TESTER

3

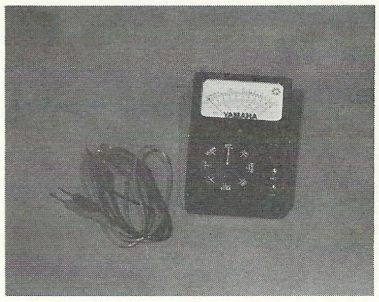

A handy pocket-size multimeter for checking continuity, resistance, AC voltage to 120VAC, DC voltage to 20VDC and DC current to 5 amps.

POINT CHECKER

4

A low-range ohmmeter designed specifically for indicating exact point where ignition points open or close. May also be used as a continuity meter.

REF. NO.	TOOL NUMBER	DESCRIPTION
1	908-90030-21-00	Electro Tester
1-1	. 908-90030-23-00	. Vibrator
1-2	. 908-90030-24-00	. Fuse (5 amp)
1-3	. 908-90030-26-00	. Strobe light
1-4	. 908-90030-27-00	. Strobe light bulb
1-5	. 908-90030-37-00	. Continuity bulb (12V)
1-6	. 908-90030-38-00	. Pilot bulb (6V)
2	908-90910-22-00	CDI Ignition Tester
2-1	. LIT-11660-22-73	. CDI Tester Oper. Mnl.
3	908-90030-43-00	Pocket Tester
4	908-90910-26-00	Point Checker
5	908-90030-47-00	Selenium Rectifier Checker

5

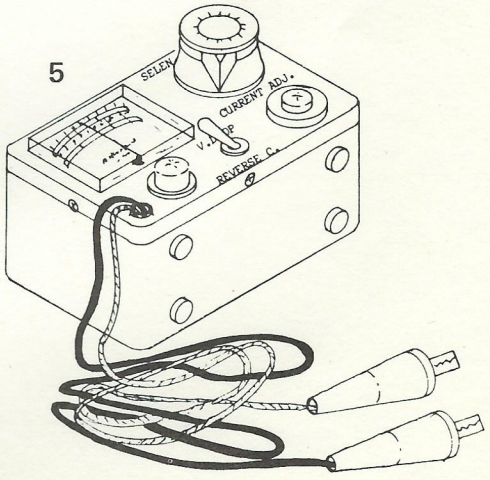

PRECISION TOOLS

1

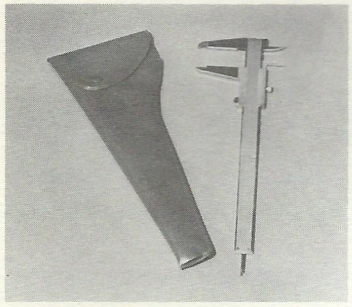

2 ~ 5

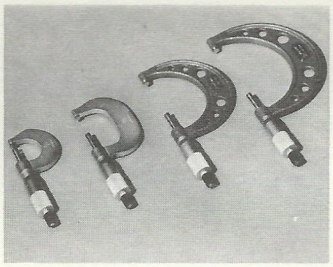

6 ~ 8

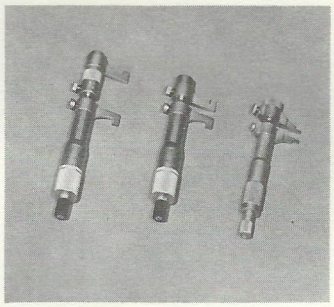

9

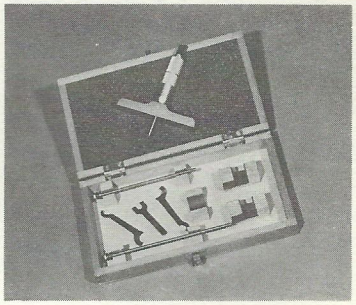

10, 11

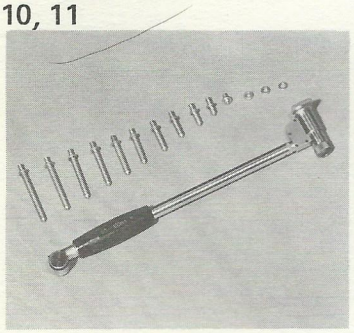

12

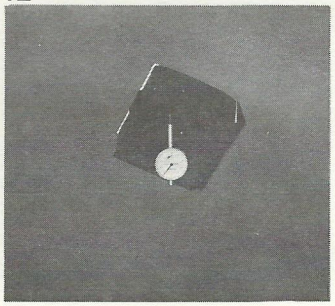

13

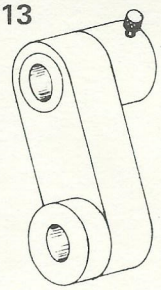

14

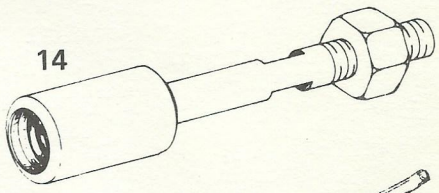

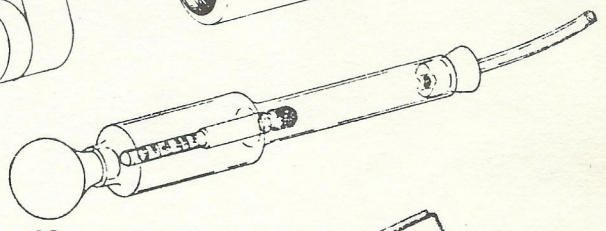

19

15 ~ 17

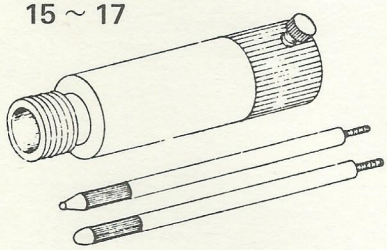

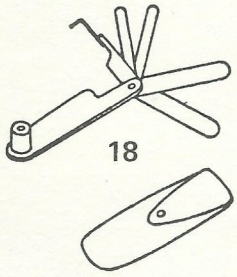

18

20

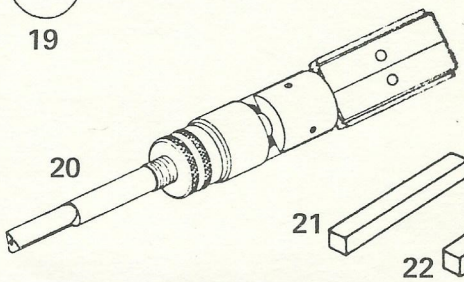

21

22

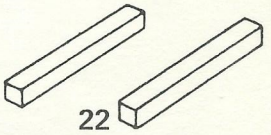

REF. NO.	TOOL NUMBER	DESCRIPTION	REMARKS
1	908-90030-05-00	Vernier Caliper	0-200mm
2	908-90030-06-00	Micrometer (outside)	0-25mm
3	908-90030-07-00	Micrometer (outside)	25-50mm
4	908-90030-08-00	Micrometer (outside)	50-75mm
5	908-90030-09-00	Micrometer (outside)	75-100mm
6	908-90030-10-00	Micrometer (inside)	5-25mm
7	908-90030-11-00	Micrometer (inside)	25-50mm
8	908-90030-12-00	Micrometer (inside)	50-75mm
9	908-90030-15-00	Micrometer (depth)	50-75mm
10	908-90030-16-00	Cylinder Gauge	35-60mm
11	908-90030-17-00	Cylinder Gauge	50-100mm
12	908-90030-02-00	Dial Gauge Assembly	.01mm increments
13	908-90010-37-00	Dial Gauge Offset Stand	For all long stud models
14	908-90010-38-00	Offset Stand Anchor Bolt	Adaptor for "cap bolt" models
15	908-90010-39-00	Dial Gauge Spark Plug Stand	All models except DT1, RT1, and SL292 (S/M)
16	908-90030-42-00	Dial Gauge Extension Tip L	3mm longer than S.T.D.
17	908-90030-41-00	Dial Gauge Extension Tip S.T.D.	
18	908-90030-01-00	Autolube Feeler Gauge	
19	908-90030-36-00	Hydrometer	
20	908-90050-07-00	Cylinder Honing Kit	All models
21	908-90050-08-00	Honing Stone Set	Coarse
22	908-90050-10-00	Honing Stone Set	Fine

PRECISION TOOLS

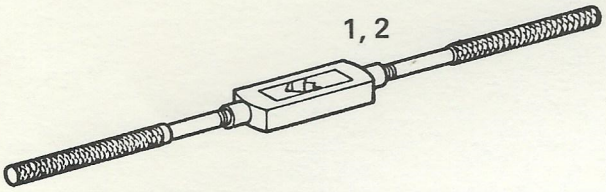

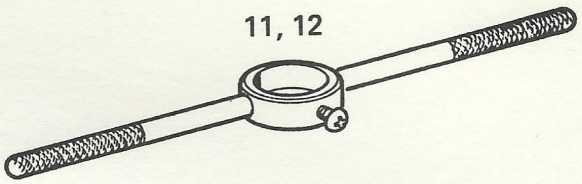

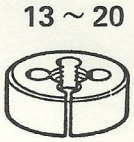

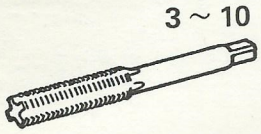

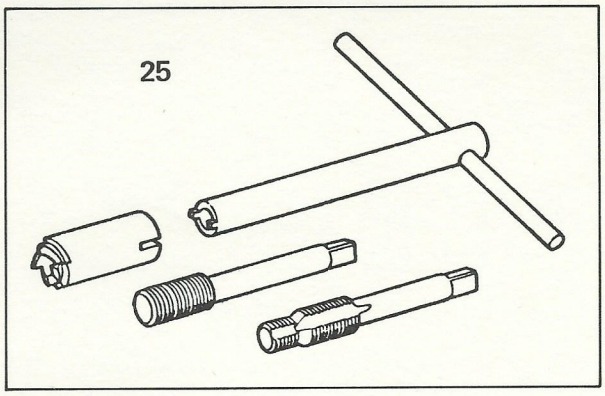

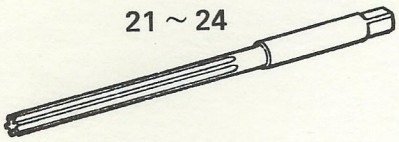

REF. NO.	TOOL NUMBER	DESCRIPTION	REMARKS
1	908-90050-40-00	Tap Handle	Large
2	908-90050-41-00	Tap Handle	Small
3	908-90050-44-00	Tap	5mm; Pitch = .9mm
4	908-90050-46-00	Tap	6mm; Pitch = 1.0mm
5	908-90050-47-00	Tap	8mm; Pitch = 1.25mm
6	908-90050-48-00	Tap	10mm; Pitch = 1.25mm
7	908-90050-42-00	Tap	3mm; (ISO Thread) x 0.5mm
8	908-90050-43-00	Tap	4mm; (ISO Thread) x 0.7mm
9	908-90050-45-00	Tap	5mm; (ISO Thread) x 0.8mm
10	908-90050-49-00	Tap	12mm; (ISO Thread) x 1.25mm
11	908-90050-72-00	Die Handle	20mm Dia. Dies
12	908-90050-51-00	Die Handle	30mm Dia. Dies
13	908-90050-54-00	Die	5mm; Pitch = 0.9mm
14	908-90050-56-00	Die	6mm; Pitch = 1.0mm
15	908-90050-57-00	Die	8mm; Pitch = 1.25mm
16	908-90050-58-00	Die	10mm; Pitch = 1.25mm
17	908-90050-52-00	Die	3mm; (ISO Thread) x 0.5mm
18	908-90050-53-00	Die	4mm; (ISO Thread) x 0.7mm
19	908-90050-55-00	Die	5mm; (ISO Thread) x 0.8mm
20	908-90050-59-00	Die	12mm; (ISO Thread) x 1.25mm
21	908-90050-62-00	Reamer	15mm
22	908-90050-61-00	Reamer	12mm
23	908-90050-60-00	Reamer	10mm
24	908-90900-05-00	Reamer	14mm
25	ACC-11080-01-00	Spark Plug Thread Repair Tool Kit	
26	ACC-11080-01-10	Spark Plug Thread Repair Inserts	14mm x 1/2" (20 pcs.)
27	ACC-11080-01-20	Spark Plug Thread Repair Inserts	14mm x 3/4" (20 pcs.)

COMMON HAND TOOLS

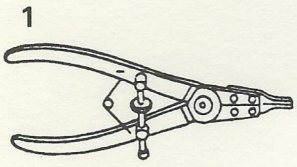

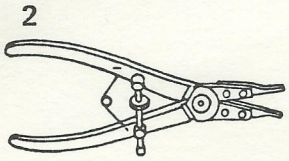

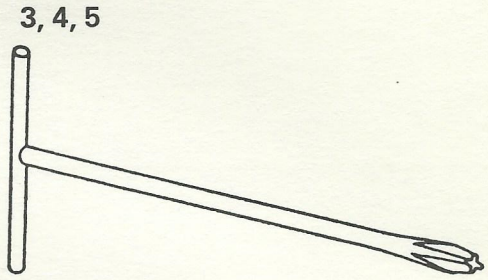

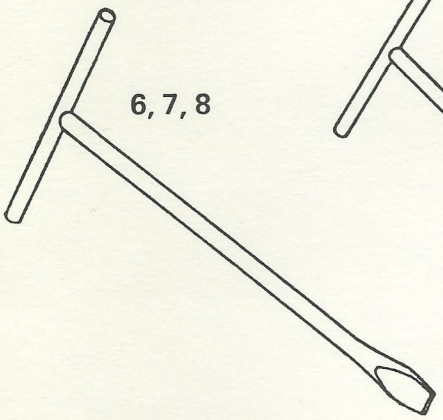

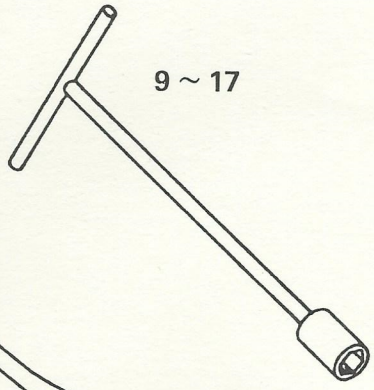

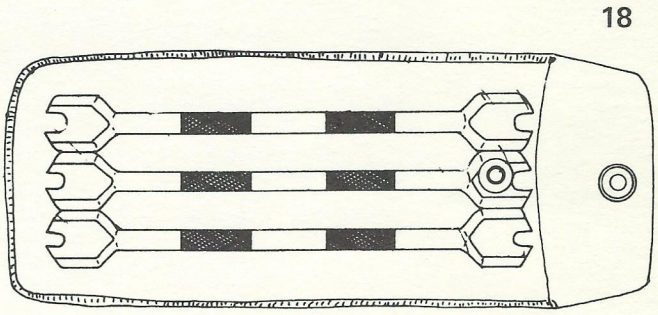

REF. NO.	TOOL NUMBER	DESCRIPTION	REMARKS
1	908-90050-01-00	Circlip Pliers ST1	Outside
2	908-90050-02-00	Circlip Pliers RT1	Inside
3	908-90050-20-00	T-handle Screwdriver (+)	Large
4	908-90050-21-00	T-handle Screwdriver (+)	Medium
5	908-90050-22-00	T-handle Screwdriver (+)	Small
6	908-90050-23-00	T-handle Screwdriver (–)	Large
7	908-90050-24-00	T-handle Screwdriver (–)	Medium
8	908-90050-25-00	T-handle Screwdriver (–)	Small
9	908-90050-27-00	T-handle Socket Wrench	9mm
10	908-90050-28-00	T-handle Socket Wrench	10mm
11	908-90050-29-00	T-handle Socket Wrench	11mm
12	908-90050-30-00	T-handle Socket Wrench	12mm
13	908-90050-32-00	T-handle Socket Wrench	14mm
14	908-90050-33-00	T-handle Socket Wrench	17mm
15	908-90050-34-00	T-handle Socket Wrench	19mm
16	908-90050-35-00	T-handle Socket Wrench	21mm
17	908-90050-26-00	Spoke Wrench Set	

CLUTCH TOOLS

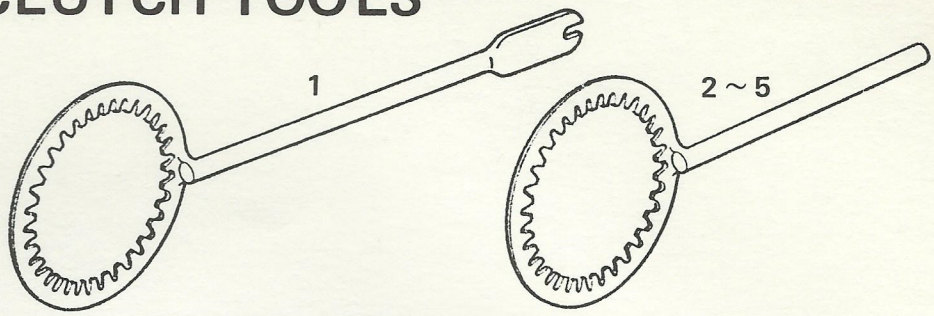

REF. NO.	TOOL PART NO.	DESCRIPTION	YG1, YF1, YJ1, YJ2, MF2, MJ2	G5T, G5S, G6S, G6SB, G7S	JT's, RD60A/B, GT's, TY80A/B, YZ80A/B	LT's, HT's, DT100A/B, MX100A/B, RS100B	LS2, HS1, HS1B, YL1, YL1E, YA6	AT Series, DT125A/B, MX125A/B, YZ360A/B	RD200A/B, RD125B, AS1, AS2, TA125/B	CT Series, DT175A/B, MX175A/B, YZ125A/B	YZ250A/B, YL2's, L5T's	ALL 250cc ENDUROS, TY250A/B, TY175B	ALL 250cc MX's, SC500/A, DT400B	YM2, YM2C, MX400B	RT Series, MX360/A	ALL 250cc & 350cc TWINS	ALL 650cc's, TX750, TZ750A/B	TX500/A, XS500B, TZ250A/B, TZ350A/B
1	908-90010-25-00	Clutch Holding Tool	●															
2	908-90010-22-00	Clutch Holding Tool					●	●			●	●	●					
3	908-90010-23-00	Clutch Holding Tool		●	●				●									
4	908-90010-24-00	Clutch Holding Tool								●				●	●	●	●	●	●
5	908-90010-69-00	Clutch Holding Tool																●	

FRONT FORK TOOLS

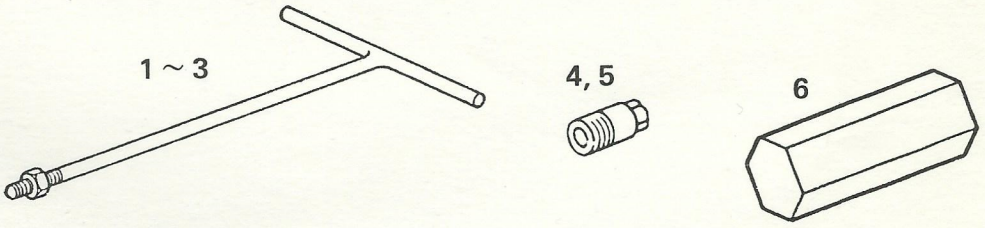

REF. NO.	TOOL PART NO.	DESCRIPTION	YF1, YJ1, YJ2, YG1, MF2, MJ2	U7E, U5, U5E, U5L	JT's, LT's, HT's, YL2's	LS2, HS1, HS1B, L5T, L5TA	G7S, G5T, G5S, G6S, G6SB	RD125B, YA6, AS1C, AS2C	CS1C, CS3C, CS3B, CS5	DS1, DS2, YD3, YDT1	YM1, DS3	YM2, YM2C, DS7, DS5, DS6B, DS6C	R1, R1, R2C, R3, R3C, R5's	XS1, XS1B, XS2	TX750, TY250A/B
1	908-90010-27-00	Fork Tube Installing Tool			●	●	●	●	●	●	●	●			
2	908-90900-20-00	Fork Tube Installing Tool												●	
3	908-90010-30-00	Fork Tube Installing Tool											●	●	●
4	908-90010-28-00	Tube Installation Adaptor									●				
5	908-90010-73-00	Tube Installation Adaptor												●	
6	908-90011-04-00	Socket Adaptor (17mm)													●

ARMATURE & MAGNETO TOOLS

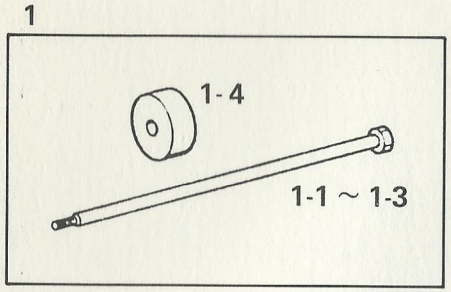

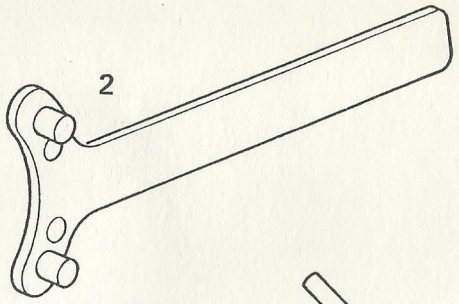

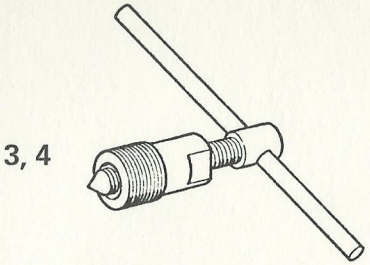

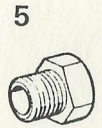

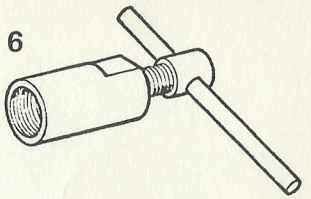

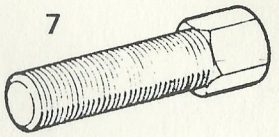

REF. NO.	TOOL PART NO.	DESCRIPTION	R1, 2, 2C, 3, U5E, L, 7E, YL1, 1E, YA5, 6	ALL JT's, U5, YF1, YJ1, YJ2	MF2, MJ2, YG1	G5T, G5S, G6S, G6SB, G7S	RD60's, ALL GT's, TY80's, YZ80's	L5T, L5TA, LS2, HS1B	ALL LT's, ALL HT's	YL1, YL1E, YA5, YA6	YZ125A/B, YZ250A/B, YX360A/B	RS100B, DT100's, MX100's	ALL 125cc ENDUROS, RD200's	AS1, AS2C, TA125	ALL 125cc MX's, ALL 175cc ENDUROS	CS1, CS3B, CS3C, CS5, RD200A/B	DT1's, DT1-MX's, DT2's, DT2MX, DT3, DT250A, TY250A	YD3, YDT1	DS1, DS2, DS3	DS5, DS6B, DS6C, DS7	YM1, YM2, YM2C	RT1, RT1B, RT2, RT3, TY175B, TY250B	MX250/A/B, MX360/A	ALL RT-MX's	R5's, RD250's, RD350's	ALL 650cc's	MX175's, DT360's, SC500's, ALL TZ's	TX500/A, XS500B, TX750
1-0	908-90900-10-00	Slide Hammer Armature Puller Set		●		●	T		●		●			●	●		●	●	●	●		●				●		
1-1	. 908-90010-47-00	. Slide Hammer Bolt 3/8"							5		5						●											
1-2	. 908-90010-48-00	. Slide Hammer Bolt - 8mm		●			T								●		1		●	5		●						
1-3	. 908-90010-49-00	. Slide Hammer Bolt - 10mm		●			T		●						●		●		●	●		2				●		
1-4	. 908-90010-50-00	. Slide Hammer Weight		●		●			●		●				●		●	●	●	●		●				●		
2	908-90010-31-00	Magneto Holding Tool			●		S	●		●		●		●		●					●		●	●	●			
3	908-90011-08-00	Magneto Puller (use for CDI inner rotors)			●		S	●		●				●							●		●	●			●	
4	908-90011-48-00	Magneto Puller																			●		●				●	
5	322-85555-10-00	Rotor Puller, CDI (outer rotors)											●												●			
6	908-90010-70-00	Rotor Puller																								●		
7	908-90010-80-00	Rotor Puller																										●

MISCELLANEOUS TOOLS

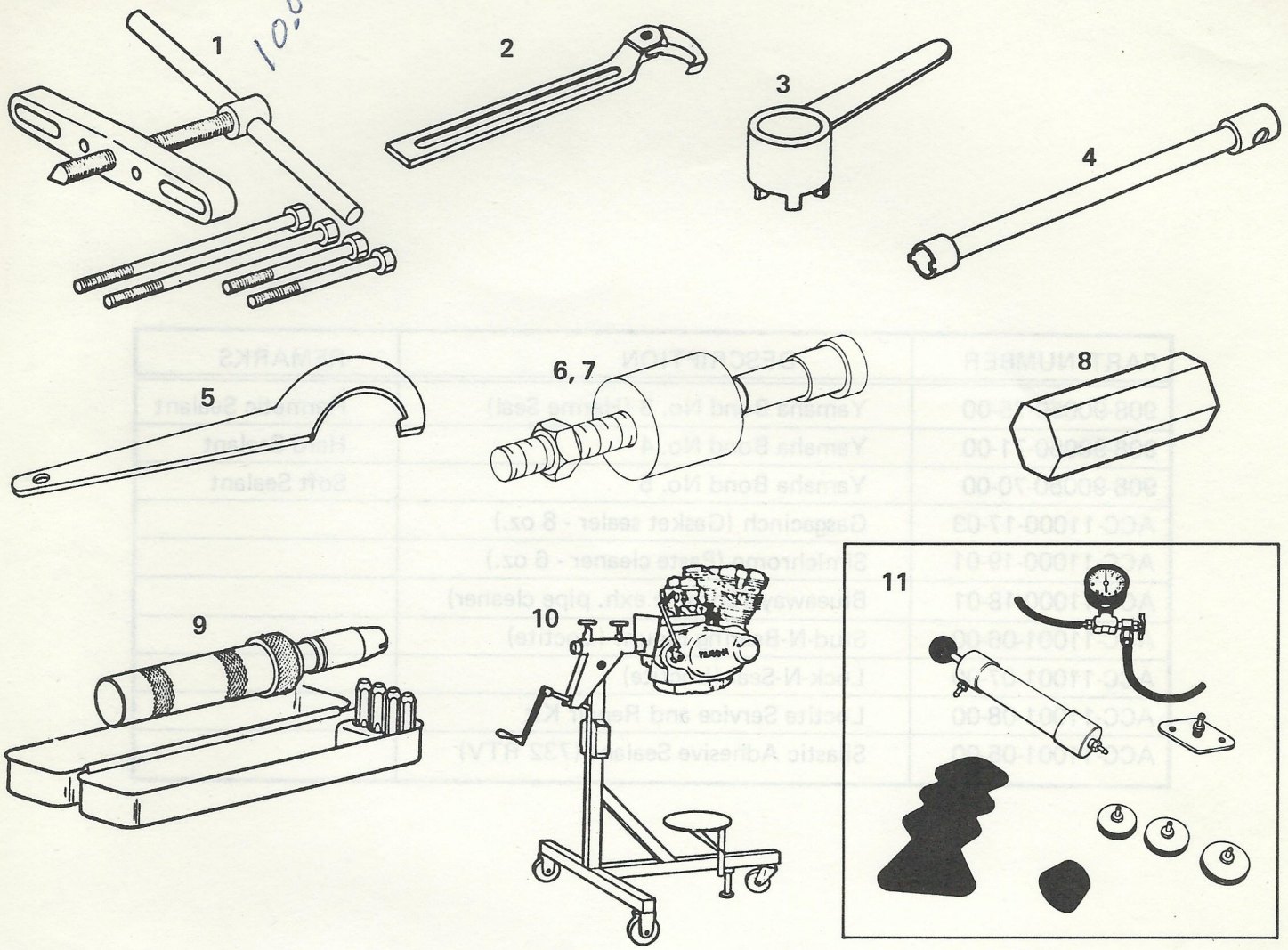

REF. NO.	TOOL PART NO.	DESCRIPTION	U5's, U7E, RD60's, HS1/B, JT1/L/2, GT1/80A/B, JT2-M, GT-MX, GTMXA, TY80A/B, YZ80A/B	YL1, YL1E, YF1, YJ1, YJ2, YG1	HT Series, LT Series, DT100's, MX100's G5T, G5S, G6S, G6SB, G7S	MF2, MJ2	AT/CT Series, MX125's/175's, DT125's/175's YZ125A/B, YZ250A/B, YZ360A/B YA5, YA6, YL2's, L5T's, LS2	AS1, AS2C, CS1, CS3B, CS3C, CS5	YD3, YDT1, DS1, DS2, DS3	ALL 250cc & 360cc ENDUROS, DT400B DS5, DS6B, DS6C	250cc MX's, 360cc MX's, SC500A/B, MX400B YM1, YM2, YM2C TY250A/B	DS7, R5's, RD300's/250's/350's, TX500's/650's R1, R2, R2C, R3	TA125, ALL T2's TX750/A
1	908-90011-35-00	Crankcase Separating Tool	●	●	●

SEALANTS & CLEANERS

PART NUMBER	DESCRIPTION	REMARKS
908-90050-75-00	Yamaha Bond No. 3 (Herme Seal)	Hermetic Sealant
908-90050-71-00	Yamaha Bond No. 4	Hard Sealant
908-90050-70-00	Yamaha Bond No. 5	Soft Sealant
ACC-11000-17-03	Gasgacinch (Gasket sealer - 8 oz.)	
ACC-11000-19-01	Simichrome (Paste cleaner - 6 oz.)	
ACC-11000-18-01	Blueaway (Chrome exh. pipe cleaner)	
ACC-11001-06-00	Stud-N-Bearing Mount (Loctite)	
ACC-11001-07-00	Lock-N-Seal (Loctite)	
ACC-11001-08-00	Loctite Service and Repair Kit	
ACC-11001-05-00	Silastic Adhesive Sealant (732 RTV)	

INDIVIDUAL CRANKSHAFT INSTALLING TOOLS

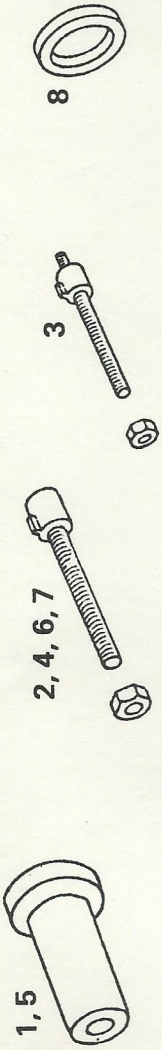

REF. NO.	TOOL PART NO.	DESCRIPTION	RT1, RT1B, RT2, RT3 RT1MX, RT1BMX, RT2MX	MX250, MX250A, MX360, MX350A, SC500, SC500A	YM2, YM2C	YM1	DT1B/C/E, DT2/3, DT1/2MX, DT250A, DT360A, TY250A	DT1	DS5, DS6B, DS6C	DS3	YD3, YDT1 DS1, DS2	CS1, CS3B, CS3C, CS5, RD200A	CT1, CT1B, CT1C, CT2, CT3, DT175A, MX175A	AS1, AS2C, TA125	AT1MX (A-B-C), AT2M, ATMX, MX125A, YZ125A	AT1, AT1B, AT1C, AT2, AT3, DT125A	DT100A, MX100A	YZ250A, YZ360A	L5T, L5TA YA5 YA6	YL1, YL1E YL2, YL2C, YL2CM	LT2, LT3, LT2MX, HT1, HT1B	LS2, HS1, HS1B	RD60/A, GT1, GT80A, GTMX, GTMXA, TY80A, YZ80A	G5T, G5S, G6S, G6SB, G7S	JT1, JT1L, JT2, JT2M	MF2, MJ2	YF1 YG1, YJ1, YJ2 U5	U5E, U5L, U7E
1	908-90010-12-00	Crank Pulling Pot	●	●	●	●	●	●	●	●	●	●	●	●	●	●	●	●	●	●	●	●	●	●	●	●	●	●
2	908-90010-14-00	Crank Setting Bolt 10mm x 1.25 pitch, Fem		○●																								
3	908-90010-15-00	Crank Setting Bolt 7mm x 1.0 pitch, Male	○●		○●			○ 5T	○●		○●	○●			○●		○●	○●			○●			○●				
4	908-90010-17-00	Crank Setting Bolt 12mm x 1.25 pitch, Fem					*●	○●	○●		○●			○●	○●		○●			○●			○●					
5	908-90010-19-00	Crank Setting Tool																										
6	908-90010-20-00	Crank Setting Bolt 18mm x 1.0 pitch, Fem																										
7	908-90010-21-00	Crank Setting Bolt 16mm x 1.0 pitch, Fem																										
8	908-90010-16-00	Crank Puller Pot Spacer																										

* - Righthand Side
O - Lefthand Side

CRANKSHAFT TOOLS

REF. NO.	TOOL PART NO.	DESCRIPTION	RD80/A, GT1, GT80A, GTMX, GTMXA, TY80A, G5T, G5S, G6S, G6SB, G7S	LT2, LT3, LT2MX, HT1, HS1, HS1B, LS2, YZ80A	YL2, YL2C, YL2CM, YL1, YL1E, HT1B	L5T, L5TA, YA5, YA6	AT1MX (A-B-C), AT2M, AT1MX, MX125A, AT1, AT1B, AT1C, AT2, AT3, DT125A, DT100A, MX100A, YZ250A, YZ360A	CT1, CT1B, CT1C, CT2, CT3, DT175A, MX175A, CS1, CS3B, CS3C, CS5, RD200A, AS1, AS2C, TA125, YZ125A	YD3, YDT1, DS1, DS2, DS5, DS6B, DS6C, DS3, DT1, DT2, DT3 & MX (B-C-E), DT250A, DT360A, DT1A, DT250A	MX250, MX250A, MX360, MX360A, SC500, SC500A, RT1, RT1B, RT2, RT3, YM2, YM2C, YM1, RT1MX, RT1BMX, RT2MX, RD250, RD250A, RD350, RD350A, R5, R5B, R5C, DS7, R1, R2, R2C, R3, XS1, XS1B, XS2, TX650, TX650A, TZ250A, TZ350A, TZ750A
			U5E, U5L, U7E	YF1, YJ1, YJ2	JT1, JT1L, JT2, JT2M, MF2, MJ2					
1	908-90021-00-00	Crankshaft Separator				●		●		
2	908-90021-01-00	Crankshaft Separator								●
3	908-90021-02-00	Crankshaft Separator							● ● ● ●	● ●
4	908-90021-03-00	Crankshaft Separator								● ● ● ●
5	908-90022-00-00	Crankshaft Jig Assy.	● ● ● ● ● ●	● ● ● ● ● ●	● ● ● ● ● ●	● ● ● ●	● ● ● ● ● ● ● ● ● ●	● ● ● ● ● ● ● ● ● ●	● ● ● ● ● ● ● ● ● ●	● ● ● ● ● ● ● ● ● ●
6	. 908-90023-00-00	. Crankshaft Jig	● ● ● ● ● ●	● ● ● ● ● ●	● ● ● ● ● ●	● ● ● ●	● ● ● ● ● ● ● ● ● ●	● ● ● ● ● ● ● ● ● ●	● ● ● ● ● ● ● ● ● ●	● ● ● ● ● ● ● ● ● ●
7	. 908-90022-02-00	. Press Box	● ● ● ● ● ●	● ● ● ● ● ●	● ● ● ● ● ●	● ● ● ●	● ● ● ● ● ● ● ● ● ●	● ● ● ● ● ● ● ● ● ●	● ● ● ● ● ● ● ● ● ●	● ● ● ● ● ● ● ● ● ●
8	. 908-90022-03-00	. Press Pin	● ● ● ● ● ●	● ● ● ● ● ●	● ● ● ● ● ●	● ● ● ●	● ● ● ● ● ● ● ● ● ●	● ● ● ● ● ● ● ● ● ●	● ● ● ● ● ● ● ● ● ●	● ● ● ● ● ● ● ● ● ●
9	. 908-90022-04-00	. Support Plates - 2/set	● ● ● ● ● ●	● ● ● ● ● ●	● ● ● ● ● ●	● ● ● ●	● ● ● ● ● ● ● ● ● ●	● ● ● ● ● ● ● ● ● ●	● ● ● ● ● ● ● ● ● ●	● ● ● ● ● ● ● ● ● ●
10	. 908-90022-05-00	. Wedge	● ● ● ● ● ●	● ● ● ● ● ●	● ● ● ● ● ●	● ● ● ●	● ● ● ● ● ● ● ● ● ●	● ● ● ● ● ● ● ● ● ●	● ● ● ● ● ● ● ● ● ●	● ● ● ● ● ● ● ● ● ●
11	. 908-90022-06-00	. Stops - 38mm		●	●					
12	. 908-90022-07-00	. Stops - 43mm	● ● ●		●	●	●	●		
13	. 908-90022-08-00	. Stops - 45mm			●					
14	. 908-90022-09-00	. Stops - 47mm							●	
15	. 908-90022-11-00	. Stops - 50mm				●	● ● ● ●	●	● ●	
16	. 908-90022-12-00	. Stops - 52mm							● ●	● ● ● ●
17	. 908-90022-13-00	. Stops - 55.75mm								●
18	. 908-90022-14-00	. Stops - 62mm					●		● ●	● ●
19	. 908-90022-15-00	. Stops - 56mm						● ●	●	
20	908-90910-21-00	Stops - 64mm							●	●
21	908-90900-53-00	R-Type Crankshaft Rebuilding Kit								● ● ● ● ● ●
22	. 908-90900-52-00	. R-Type Support Pot								● ● ● ● ● ●
23	. 908-90900-54-00	. Support Jig - 2/set								● ● ● ● ● ●
24	. 908-90900-55-00	. Stops - 66mm								● ●
25	. 908-90900-70-00	. Alignment Block - 2/set								● ● ● ● ● ●
26	. 908-90900-56-00	. Cam Sprocket Installation Tool								●
27	. 908-90900-51-00	. R5 Inner Crankshaft Spacer								●
28	908-90900-57-00	Universal Crankshaft Installing Set	● ● ● ● ● ●	● ● ● ● ● ●	● ● ● ● ● ●	● ● ● ●	● ● ● ● ● ● ● ● ● ●	● ● ● ● ● ● ● ● ● ●	● ● ● ● ● ● ● ● ● ●	● ● ● ● ● ● ● ● ● ●
29	. 908-90900-58-00	. Universal Crankshaft Installing Pot	● ● ● ● ● ●	● ● ● ● ● ●	● ● ● ● ● ●	● ● ● ●	● ● ● ● ● ● ● ● ● ●	● ● ● ● ● ● ● ● ● ●	● ● ● ● ● ● ● ● ● ●	● ● ● ● ● ● ● ● ● ●
30	. 908-90900-59-00	. Installing Pot Spacer	● ● ● ● ● ●	● ● ● ● ● ●	● ● ● ● ● ●	● ● ● ●	● ● ● ● ● ● ● ● ● ●	● ● ● ● ● ● ● ● ● ●	● ● ● ● ● ● ● ● ● ●	● ● ● ● ● ● ● ● ● ●
31	. 908-90900-60-00	. Crankshaft Installing Bolt	● ● ● ● ● ●	● ● ● ● ● ●	● ● ● ● ● ●	● ● ● ●	● ● ● ● ● ● ● ● ● ●	● ● ● ● ● ● ● ● ● ●	● ● ● ● ● ● ● ● ● ●	● ● ● ● ● ● ● ● ● ●
32	. 908-90900-61-00	. Adapter No. 1, Crankshaft Inst. Bolt (7mm x 1.0mm R.H. Male Thread)	O ●	O ●	O ●	O 5T ●	O ●	O ●	O ● O ● O ● O ● O ●	O ● O ● O ● O ● O ●
33	. 908-90900-62-00	. Adaptor No. 2, Crankshaft Inst. Bolt (10mm x 1.25mm R.H. Female Thread)	O ●	O ●	O ●	O 5S ●			O ●	
34	. 908-90900-63-00	. Adaptor No. 3, Crankshaft Inst. Bolt (12mm x 1.25mm R.H. Female Thread)	* ●	O 6S ●	O ●		O ● O ● O ●	O ● O ● O ● O ● O ●	O ● O ● O ● O ● O ●	O ● O ● O ● O ● O ●
35	. 908-90900-64-00	. Adaptor No. 4, Crankshaft Inst. Bolt (12mm x 1.0mm R.H. Female Thread)	O ●	* ●	* ● * ● * ● * ● * ● * ● * ●		* ● * ● * ● * ● * ● * ●			
36	. 908-90900-65-00	. Adaptor No. 5, Crankshaft Inst. Bolt (12mm x 1.0mm L.H. Female Thread)	* ● * ● * ● * ●	* ●		* ●				
37	. 908-90900-66-00	. Adaptor No. 6, Crankshaft Inst. Bolt (14mm x 1.0mm R.H. Female Thread)					* ●			
38	. 908-90900-67-00	. Adaptor No. 7, Crankshaft Inst. Bolt (16mm x 1.0mm R.H. Female Thread)							O ●	O ●
39	. 908-90900-68-00	. Adaptor No. 8, Crankshaft Inst. Bolt (18mm x 1.0mm R.H. Female Thread)					* ●		O ●	* ● * ● * ● O ● * ● * ● * ●

* - Right Hand Side

O - Left Hand Side

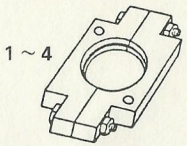

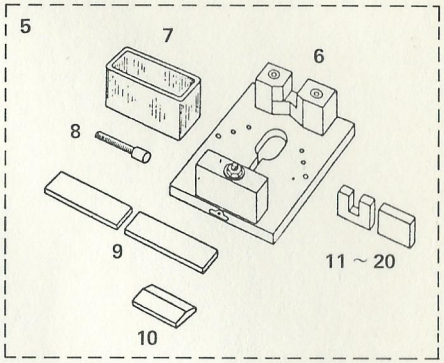

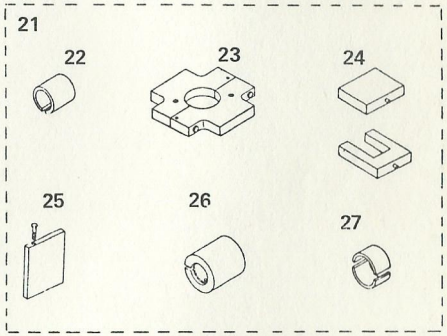

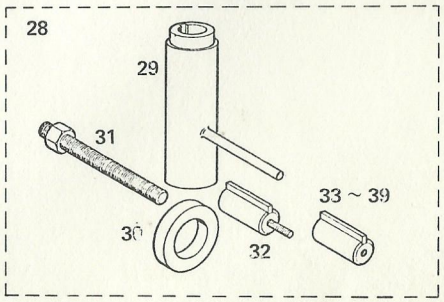

TX500/A, XS500B SPECIAL TOOLS

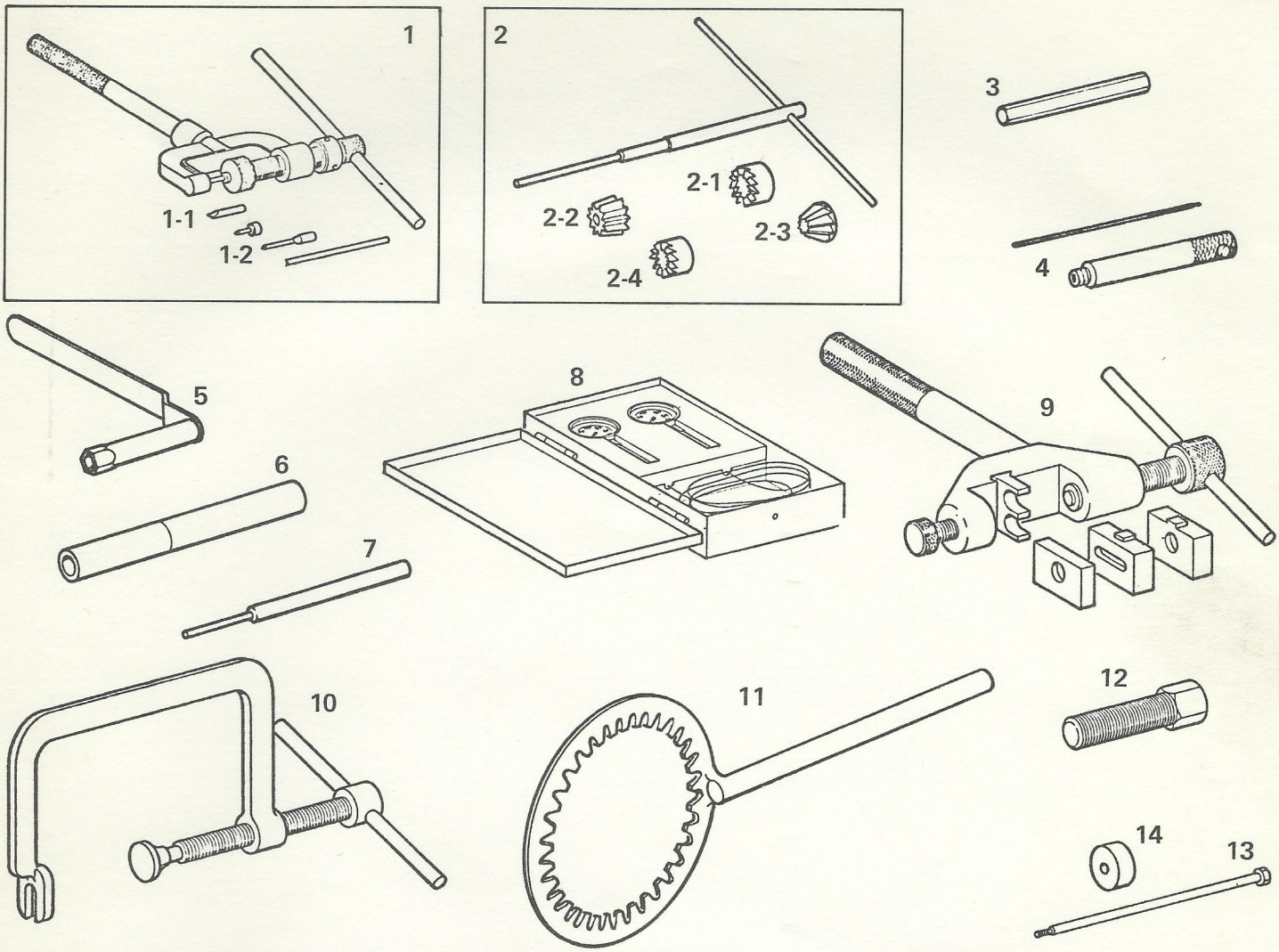

REF. NO.	PART NUMBER	DESCRIPTION	REMARKS
1	908-90011-12-00	CAM CHAIN CUTTER ASSY.	
1-1	. 908-90011-13-00	. PIN, Cutter	
1-2	. 908-90011-24-00	. PIN, Caulking	
2	908-90011-32-00	VALVE SEAT CUTTER ASSY.	
2-1	. 908-90011-16-00	. CUTTER, Intake, Flat	
2-2	. 908-90011-33-00	. CUTTER, In (10°), Ex (25°)	
2-3	. 908-90011-18-00	. CUTTER, In/Ex, 45°	
2-4	. 908-90011-19-00	. CUTTER, Exhaust, Flat	
2-5	. 908-90011-21-00	. PILOT, Cutter	
2-6	. 908-90030-60-00	. ATTACHMENT, Pilot	
3	908-90011-23-00	WRENCH, Hex, 10mm	
4	908-90011-26-00	DIAL GAUGE STAND ASSY.	Includes Tip Extension
5	908-90011-27-00	WRENCH, Clutch Adjust	
6	908-90011-29-00	SETTER, Valve Guide	
7	908-90011-22-00	DRIFT PUNCH, Guide Removal	5.25mm ϕ
8	908-90030-48-00	VACUUM GAUGE ASSY., (-76cmHg)	Two Gauges in Set
9	908-90010-81-00	DRIVE CHAIN TOOL	May be used on TX750
10	908-90010-95-00	VALVE SPRING COMPRESSOR	May be used on TX750
11	908-90010-24-00	CLUTCH HOLDING TOOL	
12	908-90010-80-00	ROTOR PULLER	May be used on TX750
13	908-90010-83-00	PULLER, Rocker Arm Shaft	May be used on TX750
14	908-90010-84-00	PULLER WEIGHT, Rocker Arm Shaft	May be used on TX750

650cc SPECIAL TOOLS

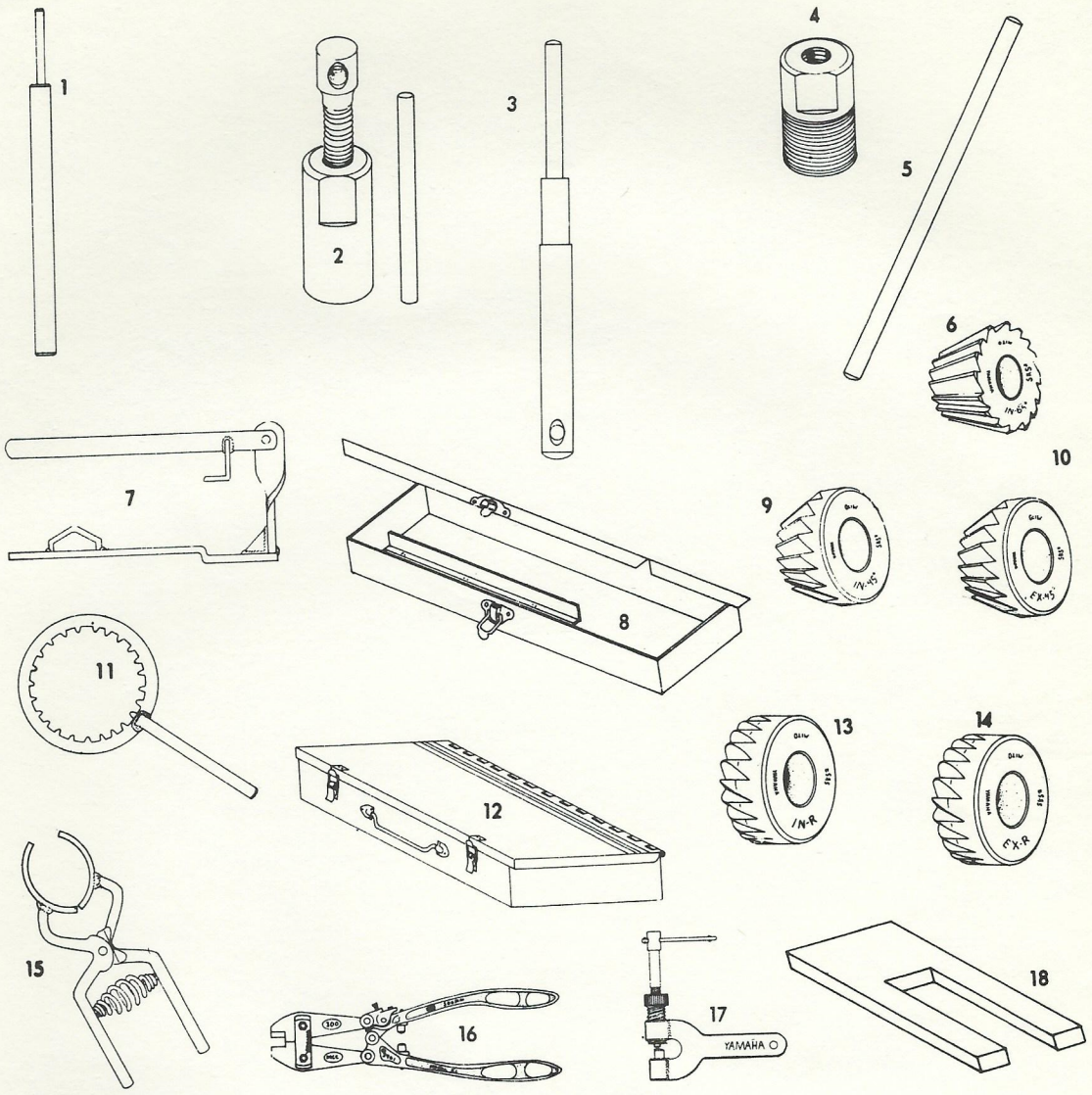

REF. NO.	TOOL NUMBER	DESCRIPTION	REMARKS
1-0	908-90010-03-00	XS1 Special Tool Kit	
1	. 908-90010-65-00	. Valve Guide Tool	
2	. 908-90010-70-00	. Rotor Puller	
3	. 908-90010-60-00	. Pilot Bar	
4	. 908-90010-73-00	. Fork Tube Adaptor	Use w/90890-01030 Puller
5	. 908-90010-61-00	. Cross Bar	
6	. 908-90010-55-00	. Valve Seat Cutter (65°)	
7	. 908-90010-68-00	. Valve Spring Compressor	
8	. 908-90010-62-00	. Valve Kit Tool Box	
9	. 908-90010-56-00	. Valve Seat Cutter (In 45°)	
10	. 908-90010-57-00	. Valve Seat Cutter (Ex 45°)	
11	. 908-90010-69-00	. Clutch Holding Tool	
12	Not Available	. Tool Box	
13	. 908-90010-58-00	. Valve Seat Cutter (In 8R)	
14	. 908-90010-59-00	. Valve Seat Cutter (Ex 8R)	
15	. 908-90010-66-00	. Piston Ring Compressor	Two to each set
16	. 908-90010-64-00	. Cam Chain Riveter	
17	. 908-90010-63-00	. Cam Chain Cutter	
18	. 908-90010-67-00	. Piston Support Plates (2)	Two to each set

TX750/A SPECIAL TOOLS

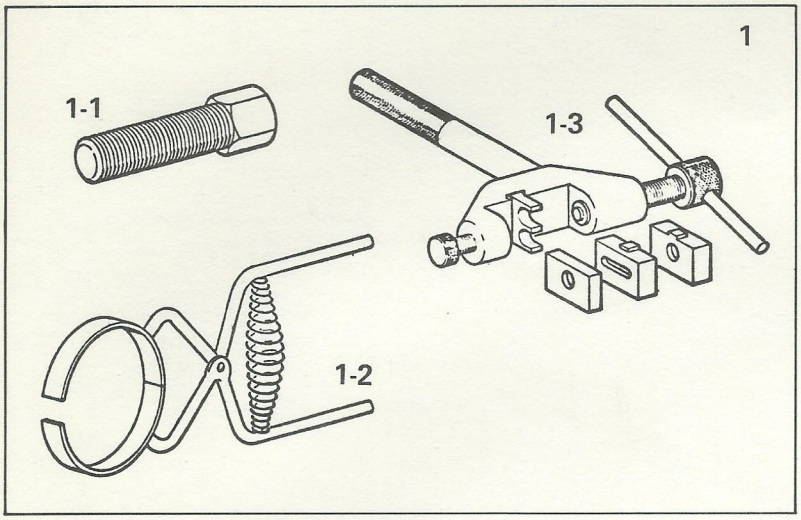

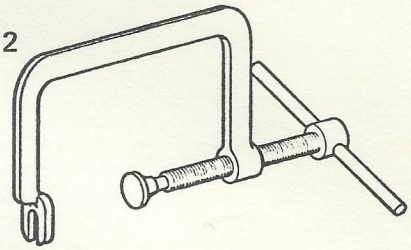

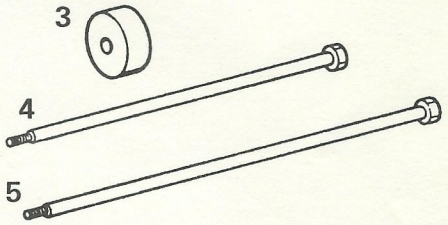

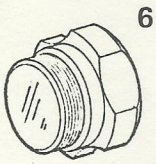

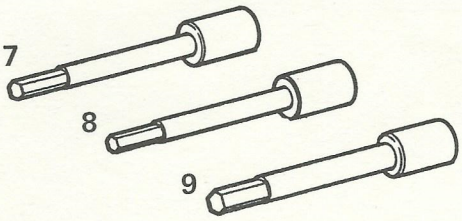

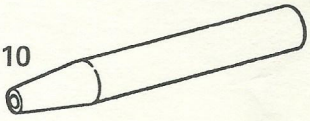

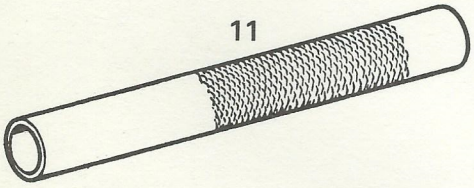

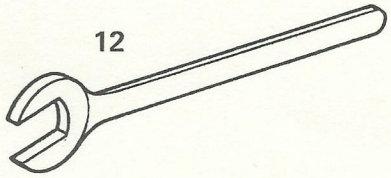

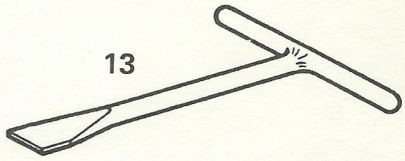

REF. NO.	PART NUMBER	DESCRIPTION	REMARKS
1	908-90097-50-73	KIT, TX750 SPECIAL TOOLS	
1-1	. 908-90010-80-00	. PULLER, Rotor	May be used on TY250 Fork Caps
1-2	. 908-90010-82-00	. SLIDER, Piston Ring	
1-3	. 908-90010-81-00	. BREAKER, Chain, Set	For rivetted chains
2	908-90010-95-00	COMPRESSOR, Valve Spring	
3	908-90010-84-00	PULLER WEIGHT, Rocker Arm Shaft	
4	908-90010-83-00	PULLER, Rocker Arm Shaft	
5	908-90010-85-00	PULLER, Balancer Shaft	
6	908-90011-03-00	ATTACHMENT, Governor Testing	
7	908-90010-89-00	SOCKET, Hexagonal, 5mm	3/8" drive
8	908-90010-90-00	SOCKET, Hexagonal, 6mm	3/8" drive
9	908-90010-91-00	SOCKET, Hexagonal, 8mm	3/8" drive
10	908-90011-25-00	TOOL, Pump Shaft Cover Installing	
11	908-90011-28-00	VALVE GUIDE INSTALL. TOOL	
12	908-90011-30-00	BALANCER WRENCH, 35mm	
13	908-90011-31-00	BALANCER DRIVER	

MONOCROSS SUSPENSION TOOLS

Maintenance and repair of Monocross Suspension Units require special tools. The tools listed below have been especially designed for efficient and fast maintenance and repairs.

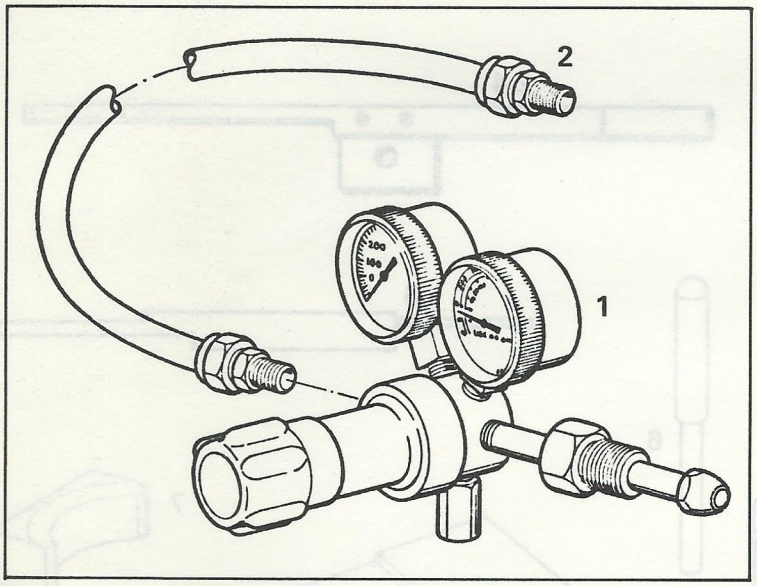

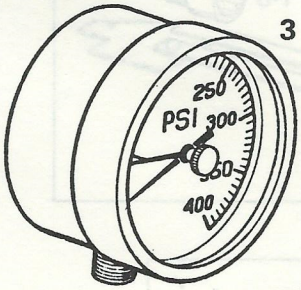

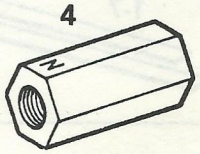

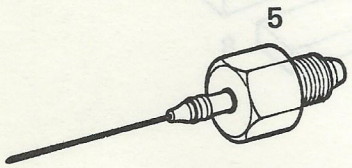

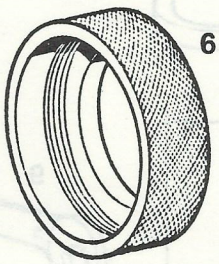

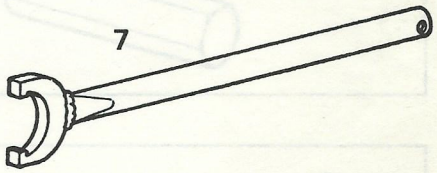

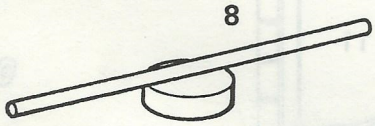

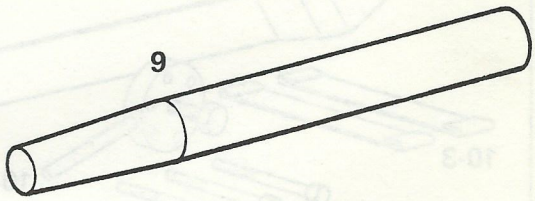

REF. NO.	TOOL NUMBER	DESCRIPTION	REMARKS
1	908-90910-28-00	REGULATOR	Includes 2 gauges & hose
2	. 908-90910-30-00	. HOSE, regulator	
3	908-90910-31-00	GAUGE, check	0-400 p.s.i.
4	908-90910-29-00	ADAPTOR, needle	Use end marked "N" for injector needle
5	908-90011-53-00	INJECTOR	
6	908-90011-54-00	MEMBRANE HOLDING TOOL	
7	908-90011-55-00	RING NUT WRENCH	
8	908-90011-56-00	CYLINDER CASE TIGHTENING TOOL	
9	908-90011-59-00	SEALING HOUSING INSERTION TOOL	

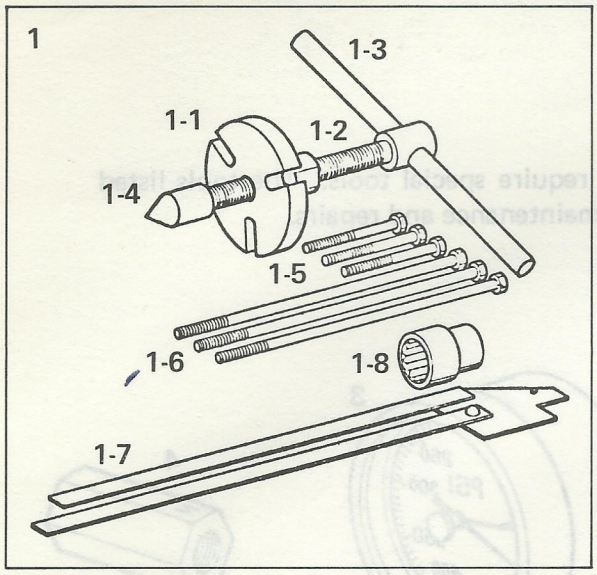
1
1-1
1-2
1-3
1-4
1-5
1-6
1-7
1-8

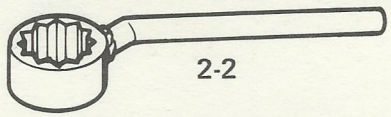
2-2

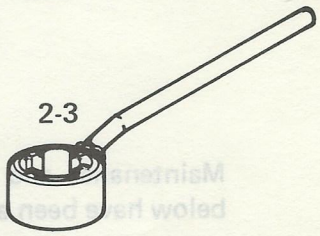
2-3

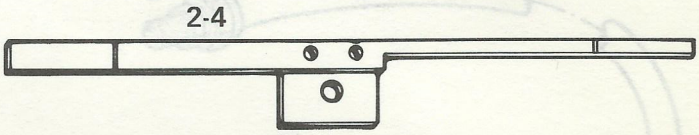
2-4

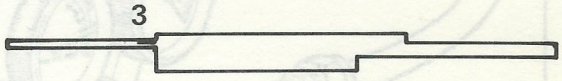
3

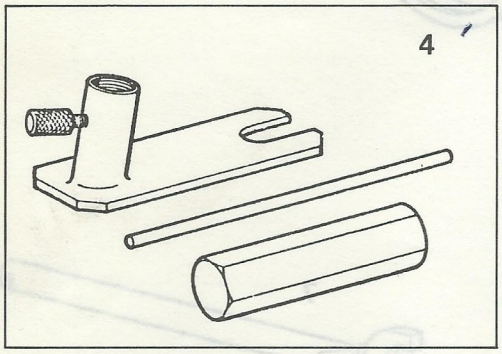
4

5

6

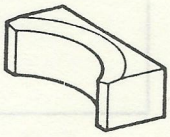
7

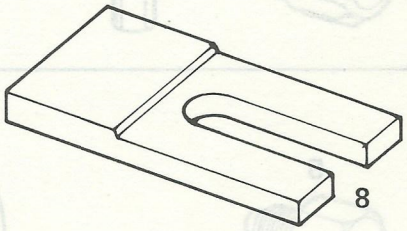
8

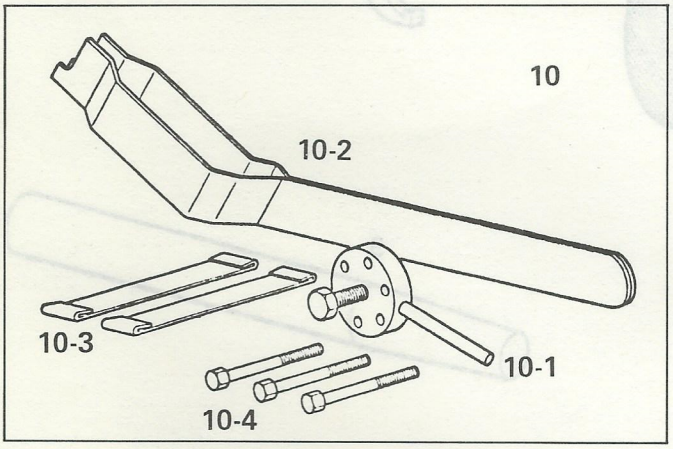
10
10-2
10-3
10-1
10-4

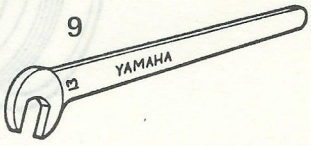
9
YAMAHA

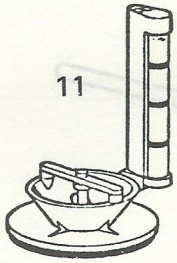
11

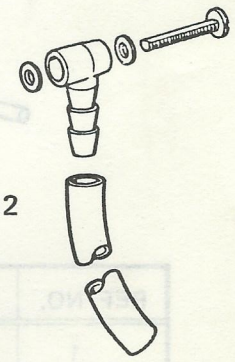
12

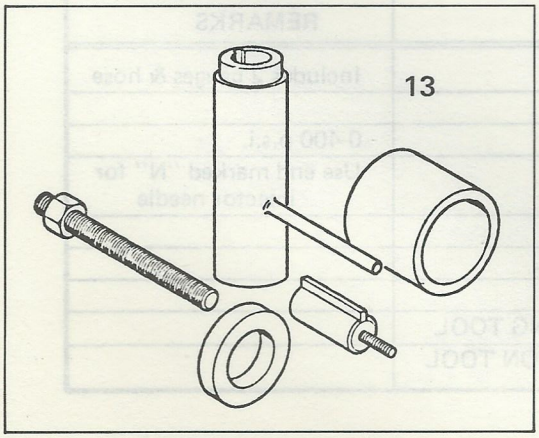
13

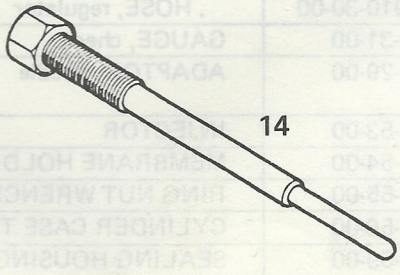
14

15

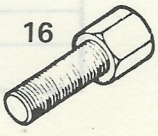
16

SNOWMOBILE SPECIAL TOOLS

REF. NO.	PART NUMBER	DESCRIPTION	REMARKS
1	908-90901-00-00	1968 S/M Special Tool Kit	
1-1	. 908-90018-02-00	. Body, Magneto Puller	
1-2	. 908-90018-03-00	. Push Screw, Magneto Puller	
1-3	. 908-90018-17-00	. Handle, Magneto Puller	
1-4	. 908-90018-04-00	. Push Screw Attachment	Primary Fixed Sheave
1-5	. 908-90018-06-00	. Screw, Magneto Holding	8-80 - 1.25 Pitch
1-6	. 908-90018-16-00	. Screw, Sheave Holding	6-160 - 1.0 Pitch
1-7	. 908-90018-09-00	. Gauge, Sheave Alignment	16mm Offset
1-8	. 908-90901-08-00	. Socket, 29mm, ½" drive	
2	908-90010-02-00	1969 S/M Special Tool Kit	
2-1	. 908-90901-05-00	. Flywheel Magneto Puller	Includes 1-1 through 1-6, above
2-2	. 908-90018-13-00	. Wrench, Box End, 29mm	
2-3	. 908-90018-12-00	. Spanner, Fixed Primary Sheave Nut	
2-4	. 908-90018-10-00	. Gauge, Sheave Alignment	6mm Offset
3	908-90018-27-00	Sheave Alignment Tool	1967-1974 models
4	908-90018-25-00	'292 Dial Gauge Stand	Use on SM/SL292's
5	908-90018-08-00	Bearing Installer	
6	908-90018-11-00	Bogie Wheel Removal Tool	Do not use on plastic wheels
7	908-90022-21-00	Crank Web Wedge	For those cranks without
8	908-90010-18-00	Crank Web Support Plate	full circle or flush webs
9	821-28139-10-00	Spanner Wrench, 13mm, Offset	
10	ACC-11250-03-00	SR Primary Clutch Removal Kit	
10-1	. ACC-11250-04-00	. Puller, SR Clutch	
10-2	. ACC-11250-05-00	. Lever, SR Clutch	
10-3	. ACC-11250-06-00	. Holder, SR Clutch	Two (2) in kit
10-4	. 971-01080-70-00	. Bolt	Three (3) in kit
11	908-90018-14-00	Carburetor Air Flow Meter	For twin diaphragm carbs.
12	908-90018-15-00	Fuel Level Gauge	For diaphragm carbs.
13	908-90910-19-01	SL292 Special Tool Kit	
14	908-90018-36-00	Bolt, Fixed Sheave Puller	GPX338F and GPX433F
15	908-90910-23-00	Slide Hammer Adaptor	GP246F and SM292F
16	908-90910-24-00	Slide Hammer Adaptor	GPX338F and GPX433F
17	908-90900-58-00	Crankshaft Installing Pot	Not shown. See page Ref. No's.
18	908-90900-59-00	Spacer, Crankshaft Installing Pot	
19	908-90900-60-00	Crankshaft Installing Bolt	
20	800-14000-00-00	Air Flow Meter Adaptor (not shown)	Use with Ref. No. 11
21	908-90010-21-00	Crank Setting Bolt (not shown)	Use on SM/SL292's
22	908-90901-16-00	Diaphragm Centering Gauge (not shown)	Use on SL/SS338/396 carbs.

APPENDIX A
USE OF UNIVERSAL CRANKSHAFT INSTALLING SET

This universal crankshaft installing set is designed for use on all Yamaha engines that split vertically. This set permits crankshaft installation into either left or right-hand case.

Only one universal pot and bolt are needed for crankshaft installation. Some engines may require the pot spacer to be slipped over the shouldered end of the pot.

Following the instructions listed below, and using the single pot, single bolt, sometimes the spacer, and one of the eight (8) available adaptors, any crankshaft can be installed in its case.

1. Determine which end of the crankshaft is to be pulled into the case, then check crankshaft tools cross-reference list on page 9 , and choose the adaptor with the proper threads.
2. Screw the selected adaptor onto the installing bolt (all eight [8] adaptors are tapped with 5/8-11 threads in one end for bolt attachment).
3. Thread the unattached adaptor end onto the crankshaft end.
4. Slip the pot over the bolt, thread on the nut, and tighten it with a crescent wrench until the crankshaft is pulled into the case.

NOTE: Follow standard crank installation precautions listed in individual service manuals.

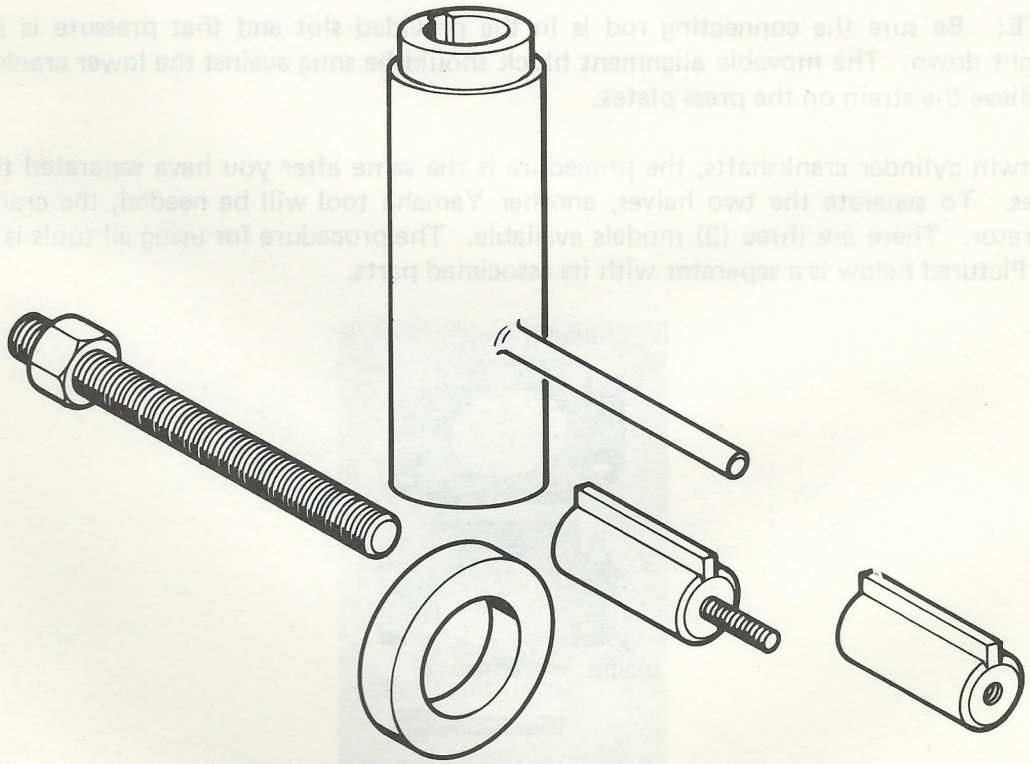

APPENDIX B
USE OF D-TYPE CRANKSHAFT REBUILDING TOOLS

DISASSEMBLY

For single cylinder engines, place the jig body in the press. Install the two press plates between the crank wheels as shown below and set the crankshaft on the jig body. Notice the slot in the jig body to accept the crankshaft connecting rod. Place the small end of the press pin against the crank pin and with the press, push the crank pin from the upper crank wheel.

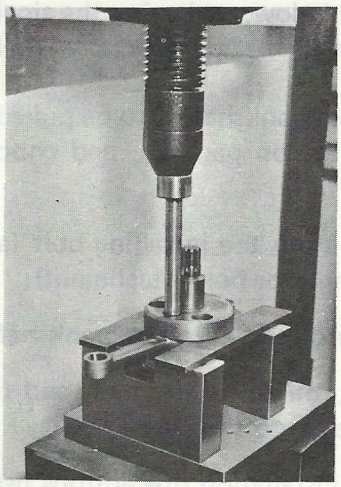

NOTE: Be sure the connecting rod is in the provided slot and that pressure is applied straight down. The movable alignment block should be snug against the lower crank wheel to relieve the strain on the press plates.

For twin cylinder crankshafts, the procedure is the same after you have separated the two halves. To separate the two halves, another Yamaha tool will be needed, the crankshaft separator. There are three (3) models available. The procedure for using all tools is identical. Pictured below is a separator with its associated parts.

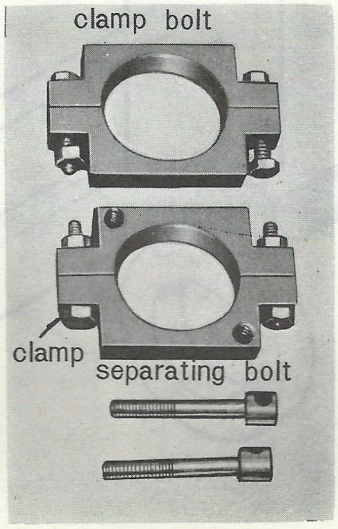

APPENDIX B, continued . . . .

To use the separating tool, place the two clamps with the holes in their sides over the space between the center bearing carrier and crank wheel. Tap the two clamp halves together with a soft hammer and install the clamp bolts as shown below in the illustration on the left. Install other clamp and bolts in the same manner. Screw the separating bolts in until they are firmly seated against the second clamp as shown in the lower right illustration.

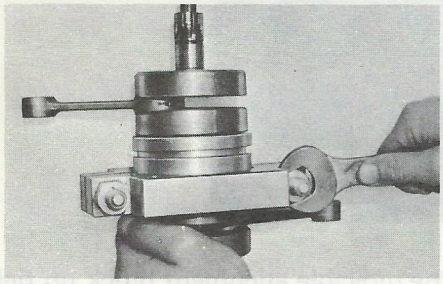

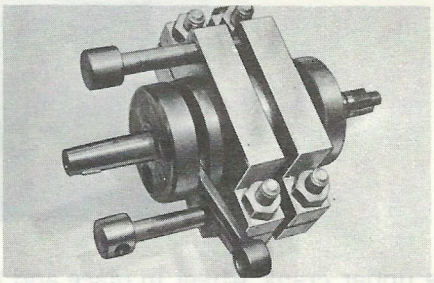

Place the entire assembly in a vice. Using a screwdriver or other suitable tool, make ½ turn on each separating bolt alternately as shown in the lower left illustration until the crank halves are separated as shown in the lower right illustration.

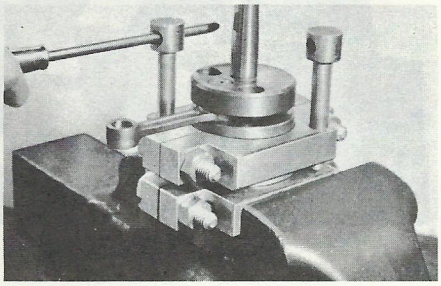

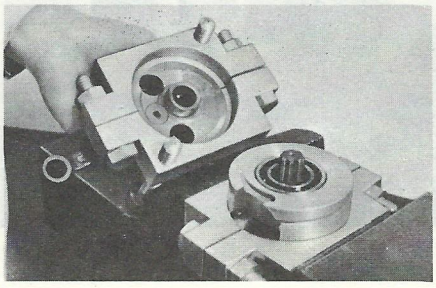

Once the two halves of the twin cylinder are separated, they may be disassembled in the same manner as the single cylinder crankshafts discussed earlier in this booklet.

ASSEMBLY

After a thorough inspection of all parts, assembly is ready to begin. With the crankshaft jig assembly there are slotted and blank stops; these are identified by a stamp on the side as are the holes in which they fit on the base of the jig body. Install the proper stops in the base of the jig body as shown below.

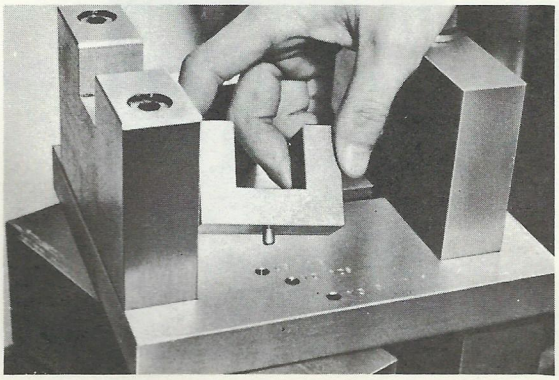

APPENDIX B, continued . . . .

Place the lower crank wheel, spacers, crank pin bearing and connecting rod in the jig as shown below. Notice the slot in one stop to accept the connecting rod.

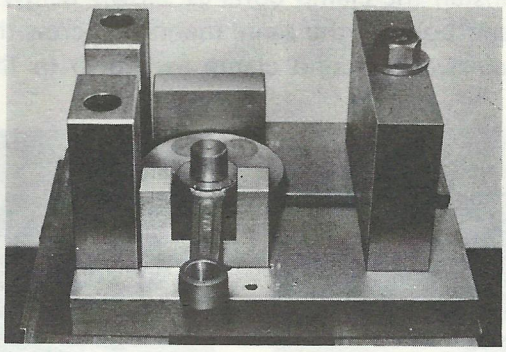

Install the upper crank wheel in place and tap the movable alignment block up tight against the crank wheels. Tighten the lock nut. See illustrations below.

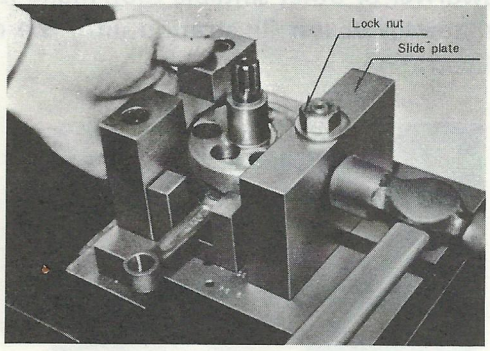

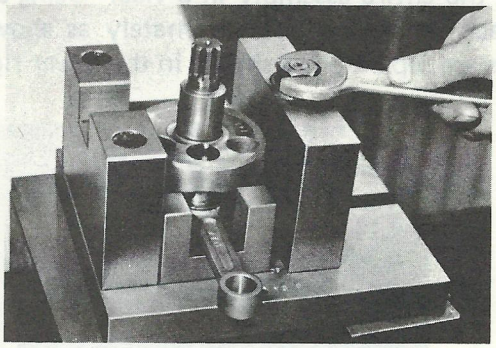

Place the press box over the upper crank wheel and with the press, apply pressure directly over the crank pin. Never use anything less than 2" in diameter against the upper surface of the press box, or damage to the box may result. Continue applying pressure to the press box until the box is flat against the two stops on the jig body. This procedure will give perfect width of the wheels if the correct stops are used. See picture below. On twin cylinder crankshafts, the crank wheels with male splines will make one half of the assembly and the other two wheels will make the other half.

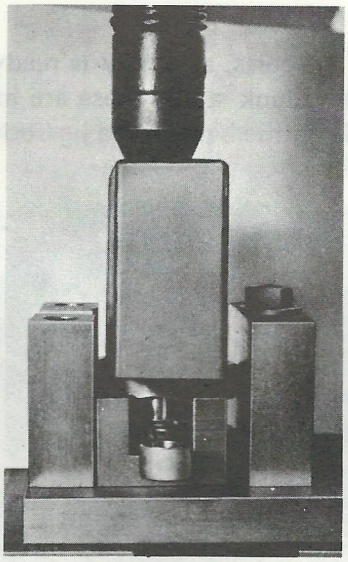

When installing the two halves of a two-cycle twin cylinder crankshaft together, make sure the crank pins are exactly opposite from each other (180° apart). Install the assembly into the jig as shown below. The two press plates go between the two lower wheels and the wedge must be between the two top wheels. Place a suitable "pot" over the crank end (the press box usually suffices) and apply pressure against the wheel surface, not the shaft end, until the two crank halves are firmly seated. The center splines are shouldered, so it is impossible to press them too close together.

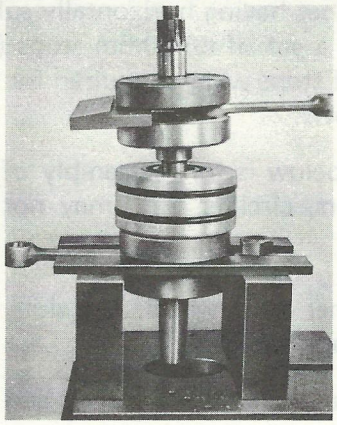

Refer to your service manual for proper alignment procedures and tolerence.

NOTE:

1. Refer to the model service manual or Yamaha Shop Guide for proper alignment procedures.
2. Runout tolerances and crank wheel/assembly dimensions can be found in the model service manual or the Yamaha Crankshaft Specifications Chart.

APPENDIX C
USE OF R-TYPE CRANKSHAFT REBUILDING KIT

The R-Type Crankshaft Rebuilding Kit (P/N 908-90900-53-00) is suitable for assembly of all crankshafts from Yamaha engines having horizontally-split crankcases (motorcycles and snowmobiles). This kit includes a set of 66.00mm stops (crank wheel spacer blocks) for XS1/XS2 crankshafts. Additional stops will be required for crankshafts from other engines. Use of the rebuilding kit is as follows:

NOTE: The procedure outlined below is for reassembly of XS1/XS2 crankshafts. Certain parts requirements (shims, washers, circlips, etc.) may not be applicable to other R-type crankshafts.

1. Press crankpins into each inner crank wheel. Use shim of suitable thickness to prevent pressing crankpin through crank wheel.
2. Place crank shim on left crank shaft (male end) and press center bearing on shaft.
3. Using Cam Sprocket Installation Tool (P/N 908-90900-56-00), align cam chain sprocket (XS1/XS2 only) on left crankshaft (male end) and press sprocket on shaft. (See service manual for proper alignment procedure).
4. Place crank shim on right crankshaft (female end) and press center bearing on shaft. Install circlip to retain bearing.
5. Thoroughly grease center crankshaft splines.
6. Align splined shafts with crankpins at 180° (XS1/XS2 at 0°) and press together.
7. Assemble two halves of Support Jig (1) (P/N 908-90900-54-00) around crankshaft between inner crank wheels. See Figure 1.

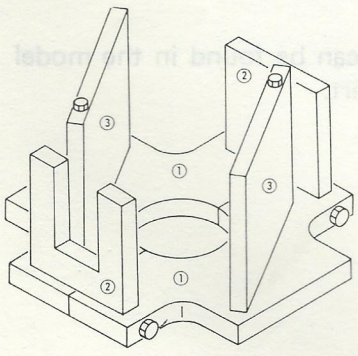

Figure 1

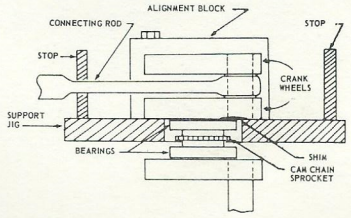

Figure 2

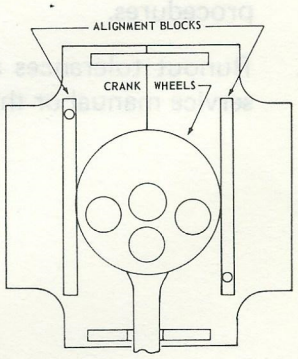

Figure 3

8. Place crankshaft assembly and support jig over large press pot in press with left crank wheel on top.
9. Place proper stops (2) on support jig body.
10. Install alignment blocks (3) on support jig body with 5/16" bolts. Do not tighten.

11. To prevent pressing crankpin through crank wheel, place a suitable shim under left crankpin between recessed area of left inner crank wheel and support jig body. See Figure 2.

12. Install connecting rod bearing, connecting rod and crankpin washers on left crankpin. Connecting rod should lie in slotted stop (2).

13. Position left outer crank wheel on left inner crank wheel. Align crankpin hole with crankpin.

14. Tap alignment blocks (3) until crank wheels are perfectly aligned and touching both alignment blocks. Tighten 5/16" bolts to secure alignment blocks. See Figure 3.

15. Place a press box over left outer crank wheel and slowly press crank wheels together until press box "bottoms out" against stops (2). Left crank wheels are now properly spaced.

16. Remove alignment blocks (3) and stops (2) from support jig bidy (1). **Do not** remove support jig from crankshaft assembly.

17. Turn support jig and crankshaft assembly over so that right crank wheel is on top.

18. Install alignment blocks (3) and stops (2) on support jig body (1) as in steps 9 and 10.

19. Repeat steps 11 through 15 for right crank wheels assembly.

20. Remove alignment blocks (3), stops (2) and support jig (1) from crankshaft assembly.

21. Align crankshaft assembly per instructions in applicable service manual.

INDEX

ADAPTOR, needle - 908-90910-29-00 13
ADAPTOR, Tool, Fork Tube - 908-90010-28-00 5
ADAPTOR, Puller, Fork Tube - 908-90010-73-00 11
ADAPTOR, Air Flow Meter - 800-14000-00-00 15
ADAPTOR, Slide Hammer - 908-90910-24-00 15
ADAPTOR, Slide Hammer - 908-90910-23-00 15
ADAPTOR, Socket - 908-90910-27-00 . . . . . 5, 7
ATTACHMENT, Governor Testing - 908-90011-03-00 . . 12
ATTACHMENT, Pilot - 908-90030-60-00 10
ATTACHMENT, Push Screw - 908-90018-04-00 15

BALANCER DRIVER - 908-90011-31-00 12
BALANCER WRENCH, 35mm - 908-90011-30-00 12
BAR, Cross, Pilot Bar - 908-90010-61-00 11
BAR, Pilot Valve Seat - 908-90010-60-00 11
BEARING INSTALLER 15
BLOCK, Alignment - 908-90900-70-00 9
BODY, Magneto Puller - 908-90018-02-00 15
BOGIE WHEEL REMOVAL TOOL - 908-90018-11-00 . . 15
BOLT ADAPTOR No. 1, Crank Install. - 908-90900-61-00 . 9
BOLT ADAPTOR No. 2, Crank Install. - 908-90900-62-00 . 9
BOLT ADAPTOR No. 3, Crank Install. - 908-90900-63-00 . 9
BOLT ADAPTOR No. 4, Crank Install. - 908-90900-64-00 . 9
BOLT ADAPTOR No. 5, Crank. Install. - 908-90900-65-00 . 9
BOLT ADAPTOR No. 6, Crank Install. - 908-90900-66-00 . 9
BOLT ADAPTOR No. 7, Crank Install. - 908-90900-67-00 . 9
BOLT ADAPTOR No. 8, Crank Install. - 908-90900-68-00 . 9
BOLT, Crank Install., Univ. - 908-90900-60-00 . . . . 9, 15
BOLT, Crank Setting - 908-90010-21-00 15
BOLT, Fixed Sheave Puller - 908-90018-36-00 15
BOLT, SR Clutch - 971-01080-70-00 15
BOX, Tool, Valve Kit - 908-90010-62-00 11
BREAKER, Chain, Set - 908-90010-81-00 12
BULB, Continuity, 12V - 908-90030-37-00 1
BULB, Pilot, 8V - 908-90030-38-00 1
BULB, Strobe Light - 908-90030-27-00 1

CALIPER, Vernier - 908-90030-05-00 2
CAM SPROCKET INSTALL. TOOL - 908-90900-56-00 . . 9
CDI IGNITION TESTER - 908-90910-22-00 1
CLEANER, Exh. Pipe, Blueaway - ACC-11000-18-01 . . . 8
CLEANER, Smichrome Paste - ACC-11000-19-01 8
CLUTCH HOLDING TOOL - 908-90010-22-00 5
CLUTCH HOLDING TOOL - 908-90010-23-00 5
CLUTCH HOLDING TOOL - 908-90010-24-00 . . . . 5, 10
CLUTCH HOLDING TOOL - 908-90010-25-00 5
CLUTCH HOLDING TOOL - 908-90010-69-00 . . . . 5, 11
COMPRESSOR, Piston Ring - 908-90010-66-00 11
COMPRESSOR, Valve Spring - 908-90010-68-00 11
COMPRESSOR, Valve Spring - 908-90010-95-00 12
CRANK PULLING POT - 908-90010-12-00 . . . . . 9a
CRANK PULLER POT SPACER - 908-90010-16-00 . . . 9a
CRANK SETTING TOOL - 908-90010-19-00 . . . . . 9a
CRANK SETTING BOLT, 16mm - 908-90010-21-00 . . . 9a
CRANK SETTING BOLT, 18mm - 908-90010-20-00 . . . 9a
CRANK SETTING BOLT, 12mm - 908-90010-17-00 . . . 9a
CRANK SETTING BOLT, 7mm - 908-90010-15-00 . . . 9a
CRANK SETTING BOLT, 10mm - 908-90010-14-00 . . . 9a
CRANKCASE PRESSURE TESTER - 908-90910-25-00 . . 7
CRANKCASE SEPARATING TOOL - 908-90011-35-00 . . 7
CRANKSHAFT INSTALL POT, Univ. - 908-90900-58-00 . 9
CRANKSHAFT INNER SPACER, R5 - 908-90900-51-00 . . 9
CRANKSHAFT INSTALL. POT SPACER - 908-90900-59-00. 9
CRANKSHAFT INSTALL. SET, Univ. - 908-90900-57-00 . 9
CRANKSHAFT JIG ASSY. (D-type) - 908-90022-00-00 . . 9
CRANKSHAFT JIG (D-type) - 908-90023-00-00 9
CRANKSHAFT REBUILD. KIT, R-type - 908-90900-53-00 . 9
CRANKSHAFT SEPARATOR (100-125cc) - 908-90021-00-00 9
CRANKSHAFT SEPARATOR (175-200cc) - 908-90021-01-00 9
CRANKSHAFT SEPARATOR (250cc twins) - 908-90021-02-00 9
CRANKSHAFT SEPARATOR (350cc twins) - 908-90021-03-00 9
CRANKSHAFT SUPPORT JIG, (R-type) - 908-90900-54-00 . 9
CRANKSHAFT SUPPORT POT, R-type - 908-90900-52-00 . 9
CUTTER, Cam Chain - 908-90010-63-00 11
CUTTER, In/Ex, 45° - 908-90011-18-00 10
CUTTER, In (10°), Ex (25°) - 908-90011-33-00 10
CUTTER, Intake, Flat - 908-90011-16-00 10
CUTTER, Exhaust, Flat - 908-90011-19-00 10
CUTTER, Valve Seat (65°) - 908-90010-55-00 11
CUTTER, Valve Seat (Intake 45°) - 908-90010-56-00 . . 11
CUTTER, Valve Seat (Exhaust 45°) - 908-90010-57-00 . . 11
CUTTER, Valve Seat (Intake 8R) - 908-90010-58-00 . . 11
CUTTER, Valve Seat (Exhaust 8R) - 908-90010-59-00 . . 11
CUTTER ASSY., Cam Chain - 908-90011-12-00 10
CUTTER ASSY., Valve Seat - 908-90011-32-00 10
CYLINDER CASE TOOL (Monocross) - 908-90011-56-00 . 13
CYLINDER HONING KIT - 908-90050-07-00 2

DIAL GAUGE ASSY. - 908-90030-20-00 2
DIAL GAUGE STAND - 908-90010-39-00 2
DIAL GAUGE STAND, 292 - 908-90018-25-00 15
DIAL GAUGE STAND ASSY. (TX500) - 908-90030-48-00 . 10
DIAL GAUGE OFFSET STAND - 908-90010-37-00 . . . 2
DIAL GAUGE O/F STAND BOLT - 908-90010-38-00 . . 2
DIAL GAUGE EXTENSION TIP, 48mm - 908-90030-41-00 . 2
DIAL GAUGE EXTENSION TIP, 51mm - 908-90030-42-00 . 2
DIE, 5mm (0.9mm Pitch) - 908-90050-54-00 3
DIE, 6mm (1.0 Pitch) - 908-90050-56-00 3
DIE, 8mm (1.25mm Pitch) - 908-90050-57-00 3
DIE, 10mm (1.25mm Pitch) - 908-90050-58-00 3
DIE, 3mm ISO (0.5mm Pitch) - 908-90050-52-00 3
DIE, 4mm ISO (0.7mm Pitch) - 908-90050-53-00 3
DIE, 5mm ISO (0.8mm Pitch) - 908-90050-55-00 3
DIE, 12mm ISO (1.25mm Pitch) - 908-90050-59-00 . . . 3
DIE HANDLE (30mm Dia. Dies) - 908-90050-51-00 . . . 3
DIE HANDLE (20mm Dia. Dies) - 908-90050-72-00 . . . 3
DRIFT PUNCH, Valve Guide Removal - 908-90011-22-00 . 10
DRIVE CHAIN TOOL - 908-90010-18-00 10

ENGINE STAND - 908-90910-27-00 7

FORK TUBE INSTALL. TOOL - 908-90900-20-00 . . . 5
FORK TUBE INSTALL. TOOL - 908-90010-30-00 . . . 5
FORK TUBE INSTALL. TOOL - 908-90010-27-00 . . . 5
FUSE, 5amp - 908-90030-24-00 1

GASKET SEALER, Gasgacinch - ACC-11000-17-03 . . . 8
GAUGE, Check (0-400psi) - 908-90910-31-00 13
GAUGE, Cylinder, 35-60mm - 908-90030-16-00 2
GAUGE, Cylinder, 50-100mm - 908-90030-17-00 2
GAUGE, Diaphragm Centering - 908-90901-16-00 15
GAUGE, Feeler, Autolube - 908-90030-01-00 2
GAUGE, Fuel Level - 908-90018-15-00 15

INDEX

HANDLE, Magneto Puller - 908-90018-17-00 15
HOLDER, SR Clutch - ACC-11250-06-00 15
HONING STONE SET, Coarse - 908-90050-08-00 2
HONING STONE SET, Fine - 908-90050-10-00 2
HOSE, Regulator - 908-90910-30-00 13
HYDROMETER - 908-90030-36-00 2

IMPACT DRIVER SET - ACC-11080-01-37 7

KIT, Tool, SR Special - ACC-11250-03-00 15
KIT, Special Tool, SL202 - 908-90910-19-01 15
KIT, Tool, S/M Special (1968) - 908-90901-00-00 15
KIT, Tool, S/M Special (1969) - 908-90010-02-00 15
KIT, Tool, 650cc Special - 908-90010-03-00 11
KIT, TX750 Special Tools - 908-90097-50-73 12

LOCTITE, Lock-N-Seal - ACC-11001-07-00 8
LOCTITE, Stud-N-Bearing - ACC-11001-06-00 8
LOCTITE, Service/Repair Kit - ACC-11001-08-00 8
LIGHT, Strobe - 908-90030-26-00 1
LEVER, SR Clutch - ACC-11250-05-00 15

MAGNETO HOLDING TOOL - 908-90010-31-00 6
MAGNETO PULLER (1975 ~) - 908-90011-48-00 . . . 6
MAGNETO PULLER - 908-90011-08-00 6
MAGNETO PULLER, S/M - 908-90901-05-00 15
MEMBRANE HOLDING TOOL - 908-90011-54-00 . . . 13
METER, Air Flow, Carb. - 908-90018-14-00 15
MICROMETER, Depth, 50-75mm - 908-90030-15-00 . . . 2
MICROMETER, Inside, 5-25mm - 908-90030-10-00 . . . 2
MICROMETER, Inside, 25-50mm - 908-90030-11-00 . . . 2
MICROMETER, Inside, 50-75mm - 908-90030-12-00 . . . 2
MICROMETER, Outside, 0-25mm - 908-90030-06-00 . . . 2
MICROMETER, Outside, 25-50mm - 908-90030-07-00 . . 2
MICROMETER, Outside, 50-75mm - 908-90030-08-00 . . 2
MICROMETER, Outside, 75-100mm - 908-90030-09-00 . . 2

OIL WINDOW NUT TOOL - 908-90010-53-00 7

PILOT, Cutter - 908-90011-21-00 10
PIN, Caulking - 908-90011-24-00 10
PIN, Cutter - 908-90011-13-00 10
PLATES, Support - 908-90022-04-00 9
PLATE, Crank Web Support - 908-90010-18-00 15
PLATES, Support, Piston - 908-90010-67-00 11
PLIERS, Circlip, Inside, RT1 - 908-90050-02-00 4
PLIERS, Circlip, Outside, ST1 - 908-90050-01-00 4
POINT, Checker - 908-90910-26-00 1
PRESS BOX - 908-90022-02-00 9
PRESS PIN - 908-90022-03-00 9
PULLER, Balancer Shaft - 908-90010-85-00 12
PULLER, Rocker Arm Shaft - 908-90010-83-00 12
PULLER, Rod Bushing, 10mm - 908-90900-26-00 7
PULLER, Rod Bushing, 12mm - 908-90900-27-00 7
PULLER, SR Clutch - ACC-11250-04-00 15
PUMP SHAFT COVER TOOL, TX750 - 908-90011-25-00 . 12

REAMER, 10mm - 908-90050-60-00 3
REAMER, 12mm - 908-90050-61-00 3
REAMER, 14mm - 908-90900-05-00 3
REAMER, 15mm - 908-90050-62-00 3
REGULATOR - 908-90910-28-00 13

ROTOR PULLER (650cc's) - 908-90010-70-00 6
ROTOR PULLER (500/750cc's) - 908-90010-80-00 . . . 6
ROTOR PULLER, CDI (outer rotors) - 322-85555-10-00 . . 6
RIVETER, Cam Chain - 908-90010-64-00 11

SEALANT, Silastic Adhesive (RTV) - ACC-11001-05-00 . . 8
SEALANT, Yamaha Bond No. 3 - 908-90050-75-00 . . . 8
SEALANT, Yamaha Bond No. 4 - 908-90050-71-00 . . . 8
SEALANT, Yamaha Bond No. 5 - 908-90050-70-00 . . . 8
SEALING HOUSING INSERTION TOOL (Monocross) - 908-90011-59-00 13
SELENIUM RECTIFIER CHECKER - 908-90030-47-00 . . 1
SCREW, Magneto Holding - 908-90018-06-00 15
SCREW, Push, Magneto Puller - 908-90018-03-00 . . . 15
SCREW, Sheave Holding - 908-90018-16-00 15
SCREWDRIVER, T-Handle (+), Large - 908-90050-20-00 . . 4
SCREWDRIVER, T-Handle (+), Medium - 908-90050-21-00 . 4
SCREWDRIVER, T-Handle (+), Small - 908-90050-22-00 . . 4
SCREWDRIVER, T-Handle (-), Large - 908-90050-23-00 . . 4
SCREWDRIVER, T-Handle (-), Medium - 908-90050-24-00 . 4
SCREWDRIVER, T-Handle (-), Small - 908-90050-25-00 . . 4
SHEAVE ALIGNMENT GAUGE (16mm Offset) - 908-90018-09-00 15
SHEAVE ALIGNMENT GAUGE (6mm Offset) - 908-90018-10-00 15
SHEAVE ALIGNMENT TOOL (All models) - 908-90018-27-00 15
SLIDE HAMMER ARMATURE PULLER SET - 908-90900-10-00 6
SLIDE HAMMER BOLT, 3/8" - 908-90010-47-00 6
SLIDE HAMMER BOLT, 8mm - 908-90010-48-00 6
SLIDE HAMMER BOLT, 10mm - 908-90010-49-00 . . . 6
SLIDE HAMMER WEIGHT - 908-90010-50-00 6
SLIDER, Piston Ring - 908-90010-82-00 12
SOCKET, Hex, 5mm, 3/8" drive - 908-90010-89-00 . . . 12
SOCKET, Hex, 6mm, 3/8" drive - 908-90010-90-00 . . . 12
SOCKET, Hex, 8mm, 3/8" drive - 908-90010-91-00 . . . 12
SOCKET, Hex, 29mm, 1/2" drive - 908-90901-08-00 . . . 15
SPANNER, Primary Sheave Nut - 908-90018-12-00 . . . 15
SPARK PLUG THREAD INSERTS (14mm x 1/2") - ACC-11080-01-10 3
SPARK PLUG THREAD INSERTS (14mm x 3/4") - ACC-11080-01-20 3
SPARK PLUG THREAD REPAIR TOOL - ACC-11080-01-00 3
SPOKE WRENCH SET - 908-90050-19-00 4
SPEEDO BUSHING REMOVAL TOOL - 908-90010-52-00 . 7
STOPS, 38mm (MF2/MJ2) - 908-90022-06-00 9
STOPS, 43mm - 908-90022-07-00 9
STOPS, 45mm - 908-90022-08-00 9
STOPS, 47mm - 908-90022-09-00 9
STOPS, 50mm - 908-90022-11-00 9
STOPS, 52mm - 908-90022-12-00 9
STOPS, 55.75mm - 908-90022-13-00 9
STOPS, 56mm - 908-90022-15-00 9
STOPS, 62mm - 908-90022-14-00 9
STOPS, 64mm - 908-90910-21-00 9
STOPS, 66mm - 908-90900-55-00 9

TAP, 5mm (0.9mm Pitch) - 908-90050-44-00 3
TAP, 6mm (1.0mm Pitch) - 908-90050-46-00 3
TAP, 8mm (1.25mm Pitch) - 908-90050-47-00 3

INDEX

TAP, 10mm (1.25mm Pitch) - 908-90050-48-00 3
TAP, 3mm ISO (0.5mm Pitch) - 908-90050-42-00 3
TAP, 4mm ISO (0.7mm Pitch) - 908-90050-43-00 3
TAP, 5mm ISO (0.8mm Pitch) - 908-90050-45-00 3
TAP, 12mm ISO (1.25mm Pitch) - 908-90050-49-00 . . . 3
TAP HANDLE, Large - 908-90050-40-00 3
TAP HANDLE, Small - 908-90050-41-00 3
TESTER, Electro, Complete - 908-90030-21-00 1
TESTER, Pocket - 908-90030-43-00 1

VACUUM GAUGE ASSY. - 908-90030-48-00 10
VALVE GUIDE SETTER - 908-90011-29-00 10
VALVE SPRING COMPRESSOR - 908-90010-95-00 . . . 10
VALVE GUIDE TOOL (650cc's) - 908-90010-65-00 . . . 11
VALVE GUIDE TOOL, TX750/A - 908-90011-28-00 . . . 12
VIBRATOR, Electro Tester - 908-90030-23-00 1

WEDGE - 908-90022-05-00 9
WEDGE, Crank Web (SL350/SL351) - 908-90022-21-00 . . 15
WEIGHT, Puller, Rocker Arm Shaft - 908-90010-84-00 . . 10, 12
WRENCH, Box End, 29mm - 908-90018-13-00 15
WRENCH, Clutch Adjust - 908-90011-27-00 10
WRENCH, Exhaust Ring Nut - 908-90010-40-00 7
WRENCH, Hex, 10mm - 908-90011-23-00 10
WRENCH, Offset Spanner, 13mm - 821-28139-10-00 . . 15
WRENCH, Ring Nut - 908-90011-55-00 13
WRENCH, Socket, T-Handle, 7mm - 908-90900-00-00 . . 4
WRENCH, Socket, T-Handle, 9mm - 908-90050-27-00 . . 4
WRENCH, Socket, T-Handle, 10mm - 908-90050-28-00 . . 4
WRENCH, Socket, T-Handle, 11mm - 908-90050-29-00 . . 4
WRENCH, Socket, T-Handle, 12mm - 908-90050-30-00 . . 4
WRENCH, Socket, T-Handle, 14mm - 908-90050-32-00 . . 4
WRENCH, Socket, T-Handle, 17mm - 908-90050-33-00 . . 4
WRENCH, Socket, T-Handle, 19mm - 908-90050-34-00 . . 4
WRENCH, Socket, T-Handle, 21mm - 908-90050-35-00 . . 4
WRENCH, Steering Nut - 908-90010-51-00 7