YAMAHA

PARTS CATALOGUE

YZ125LC'94 (4JY1) EUROPE
YZ125F (4JY2) U.S.A.,CANADA,OTHERS,S.AFRICA
YZ125 (4JY3) JAPAN
YZ125F (4JY4) OCEANIA

YAMAHA GENUINE Parts & Accessories

www.legends-yamaha-enduros.com

44JY-100E1

A2

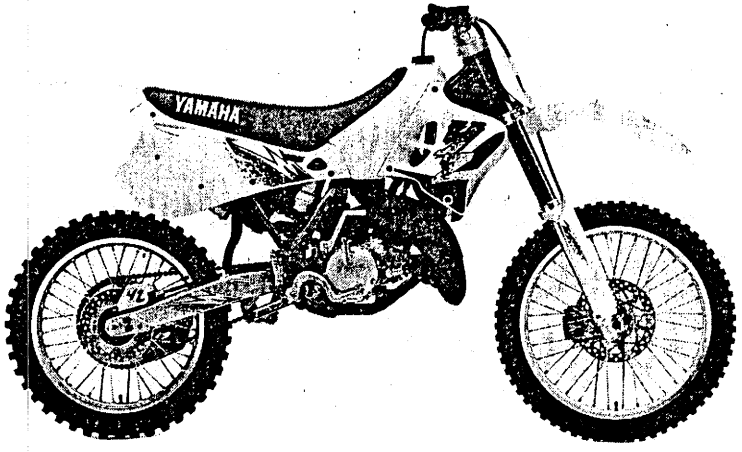

www.legends-yamaha-enduros.com

A3

FOREWORD

This Parts Catalogue is related to the parts in use for the Yamaha YZ125LC'94(4JY1)/YZ125F(4JY2)/YZ125(4JY3)/YZ125F(4JY4). When you are ordering replacement parts for the YZ125LC'94(4JY1)/YZ125F(4JY2)/YZ125(4JY3)/YZ125F(4JY4), refer to the Parts Catalogue and quote both part numbers and part names correctly.

1. Modifications or additions which have been made after issue of the Parts Catalogue will be announced in the Yamaha Parts News.
   It is advisable that according to the Yamaha Parts News you make necessary corrections to the Parts Catalogue on hand to keep it up-to-date.

2. Abbreviations
   The following abbreviations are used in this Parts Catalogue.

U.R.	Use size (thickness) and/or number as required.
U.N.	Use as many as you need.
A.P.	Alternate Parts
L.M.	Local Made
F#	Frame No. (Applicable machine No.)

3. The parts marked with (•) in the parts number column of this Catalogue are not supplied with by Yamaha, those have to be found locally.

4. Parts, which are to be supplied in the form of assemblies, are listed with an indention of one letter's space, and a dot (.) is put against the name of each part.

   EXAMPLE

   CARBURETOR ASS'Y
   . JET, pilot
   . NOZZLE, main

5. Indication of No. of constituent parts for assembly
   The numeral appearing to the right of each constituent part under the description indicates the quantity of such parts for each individual assembly unit.

   EXAMPLE

Part No.	Description	Q'ty	Remarks
2F5-83310-60	FRONT FLASHER LIGHT ASS'Y	2	
115-83311-60	. BULB (6V-18W)	1	
1M1-83309-60	. REFLECTOR	1	

6. Initial Serial No. and Color Code

4JY1	Ⓐ	Frame Serial No.	4JY-000101 and following
	Ⓑ	Engine Serial No.	4JY-000101 and following
4JY2	Ⓐ	Frame Serial No.	4JY-009101 and following
	Ⓑ	Engine Serial No.	4JY-009101 and following
4JY3	Ⓐ	Frame Serial No.	4JY-019101 and following
	Ⓑ	Engine Serial No.	4JY
4JY4	Ⓐ	Frame Serial No.	4JY-022101 and following
	Ⓑ	Engine Serial No.	4JY-022101 and following

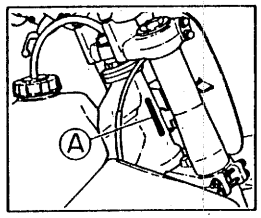

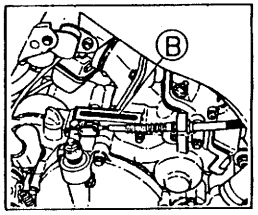

Color Code	Color Name	Abbreviate
0206	PURPLISH WHITE SOLID 1	PWS1

www.legends-yamaha-enduros.com

7. Applicable colors of graphics are represented in the "Remarks" column by the letter(s) appropriately picked out of the full word(s) showing such colors.

   EXAMPLE

Part No.	Description	Q'ty	Remarks
2N4-24110-00-X5	FUEL TANK COMP.	1	MAXIM RED
3J1-24240-10	. GRAPHIC, fuel tank set	1	for MXR

CONTENTS

ENGINE

Cylinder Head ..... B2～B3
Governor B4
Crankshaft, Piston B5
Water Pump B6
Radiator, Hose B7
Intake B8
Carburetor ..... B9～B10
Exhaust B11
Crankcase B12
Crankcase Cover 1 ..... B13
Starter B14
Clutch B15
Transmission ..... C2～C3
Shift Cam, Fork C4
Shift Shaft C5

CHASSIS

Frame C6
Fender C7
Side Cover C8
Rear Arm ..... C9～C10
Rear Suspension C11
Steering C12
Front Fork ..... C13～C15
Fuel Tank D2
Seat D3
Front Wheel D4
Front Brake Caliper D5
Rear Wheel ..... D6～D7
Rear Brake Caliper D8
Steering Handle, Cable D9
Front Master Cylinder D10
Stand, Footrest D11
Rear Master Cylinder D12
Generator D13
Handle Switch, Lever D14
Electrical 1 ..... D15

ALTERNATE PARTS

Alternate (Chassis) E2

REPAIR KIT

Repair Kit E3

INDEX

Numerical Index ..... M1～M3

www.legends-yamaha-enduros.com

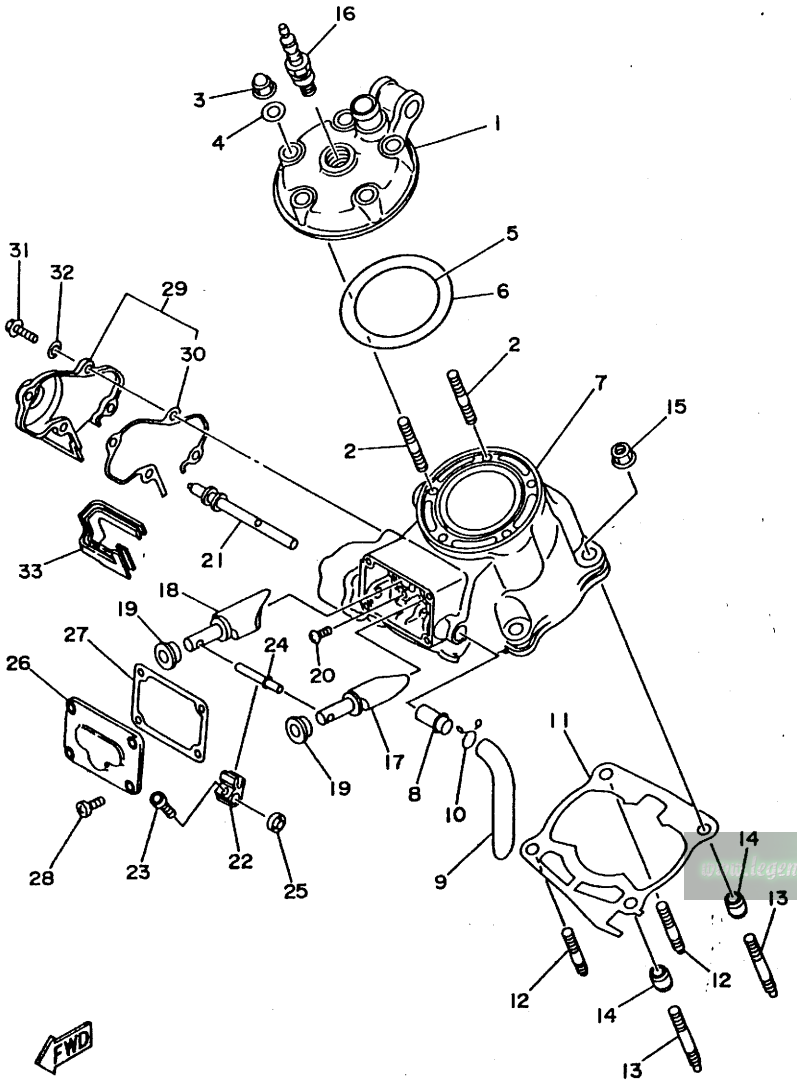

4JY1100-4010

FIG. 1 CYLINDER HEAD

REF. NO.	PART NO.	DESCRIPTION	Q'TY	REMARKS
1	4JY-11111-00	HEAD, CYLINDER 1	1	
2	90116-08394	BOLT, STUD	5	
3	90176-08026	NUT, CROWN	5	
4	90201-08087	WASHER, PLATE	5	
5	93210-63442	O-RING	1	
6	93210-90785	O-RING	1	
7	4JY-11311-00	CYLINDER 1	1	
8	4JY-11167-00	PIPE, BREATHER 2	1	
9	4JY-11166-00	PIPE, BREATHER 1	1	
10	90467-12053	CLIP	1	
11	4JY-11351-00	GASKET, CYLINDER	1	
12	90116-08318	BOLT, STUD	2	
13	90116-08388	BOLT, STUD	2	
14	99510-10114	PIN, DOWEL	2	
15	90179-08491	NUT	4	
16	94702-00325	PLUG, SPARK (NGK B9EG)	1	UR
	94703-00325	PLUG, SPARK (NGK B9EG)	1	UR FOR JAPAN
17	4JY-1131A-00	VALVE 1	1	
18	4JY-1132A-00	VALVE 2	1	
19	4JY-1131E-00	HOLDER 1	2	
20	98903-05010	SCREW, BIND	4	
21	4JY-1131V-00	SHAFT 1	1	
22	4JY-11832-00	LEVER, LINK	1	
23	91316-04008	BOLT	1	
24	4JY-11812-00	SHAFT, VALVE	1	
25	93104-08040	OIL SEAL	1	
26	4JY-1131M-00	COVER	1	
27	4JY-11354-00	GASKET	1	

www.legends-yamaha.com

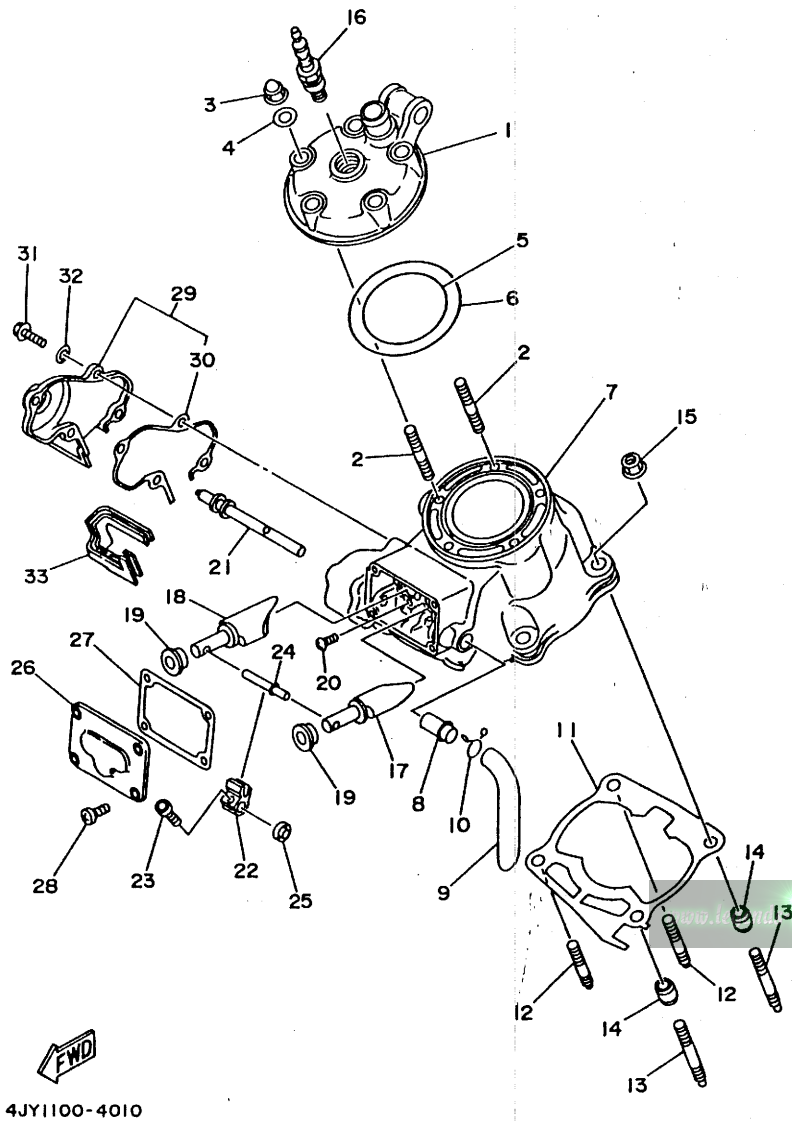

4JY1100-4010

FIG. 1 CYLINDER HEAD

REF. NO.	PART NO.	DESCRIPTION	Q'TY	REMARKS
28	98901-05014	SCREW, BIND	4	
29	4JY-11991-00	HOUSING 1	1	
30	4JY-11993-00	.GASKET	1	
31	97001-05016	BOLT	4	
32	92901-05600	WASHER, PLATE	4	
33	4JY-11995-00	SEAL, HOUSING	1	

www.t-max-yamaha-enduros.com

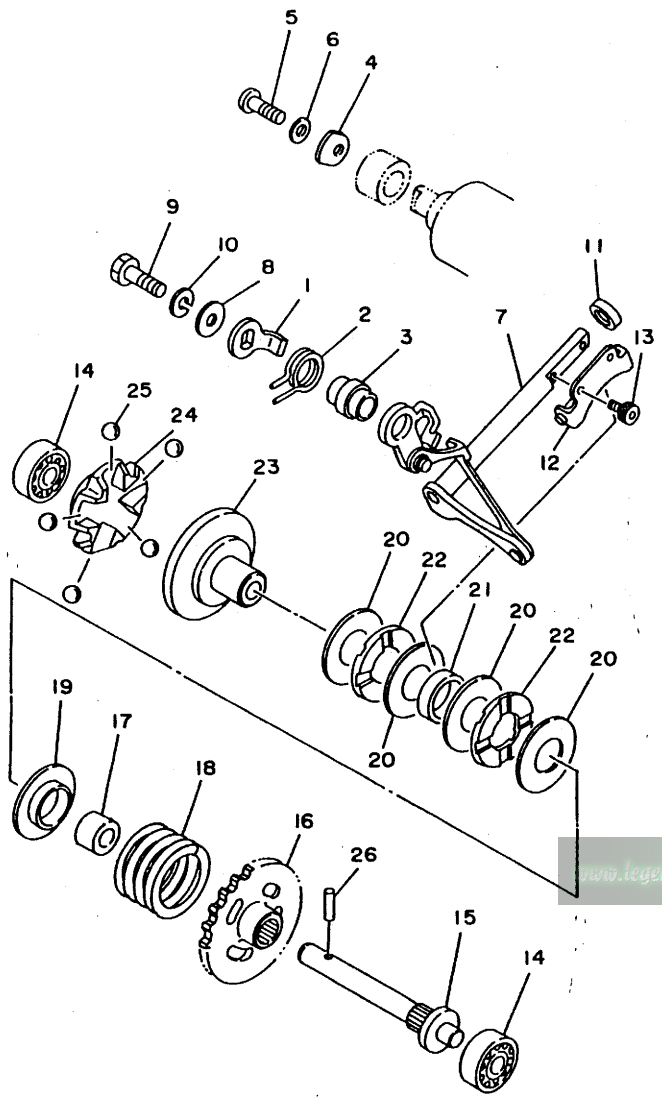

4JY1100-4020

FIG. 2 GOVERNOR

REF. NO.	PART NO.	DESCRIPTION	Q'TY	REMARKS
1	4JY-11931-00	LEVER	1	
2	90508-14783	SPRING, TORSION	1	
3	4JY-11937-00	BOSS, LEVER	1	
4	4JY-11915-00	PLATE, THRUST 1	1	
5	98580-05014	SCREW, PAN HEAD	1	
6	92901-05100	WASHER, SPRING	1	
7	4JY-11990-00	PUSH ROD ASSY	1	
8	90201-057H5	WASHER, PLATE	1	
9	97001-05016	BOLT	1	
10	92990-05100	WASHER, SPRING	1	
11	93104-08040	OIL SEAL	1	
12	3JE-11922-00	FORK, GOVERNOR	1	
13	91316-04006	BOLT	2	
14	93300-60814	BEARING (608M4ML01)	2	NMB
15	5X4-11921-02	SHAFT, GOVERNOR	1	
16	24X-11953-01	GEAR, GOVERNOR	1	
17	90560-08213	SPACER	1	
18	90501-264J6	SPRING, COMPRESSION	1	
19	5X4-11952-00	PLATE	1	
20	90201-154E9	WASHER, PLATE	4	
21	90387-152F2	COLLAR	1	
22	93340-21505	BEARING, THRUST	2	
23	5X5-11912-01	RETAINER, WEIGHT	1	
24	4JX-11911-01	RETAINER	1	
25	93521-64032	BALL	5	
26	93603-14179	PIN, DOWEL	1	

www.legends-yamaha.com

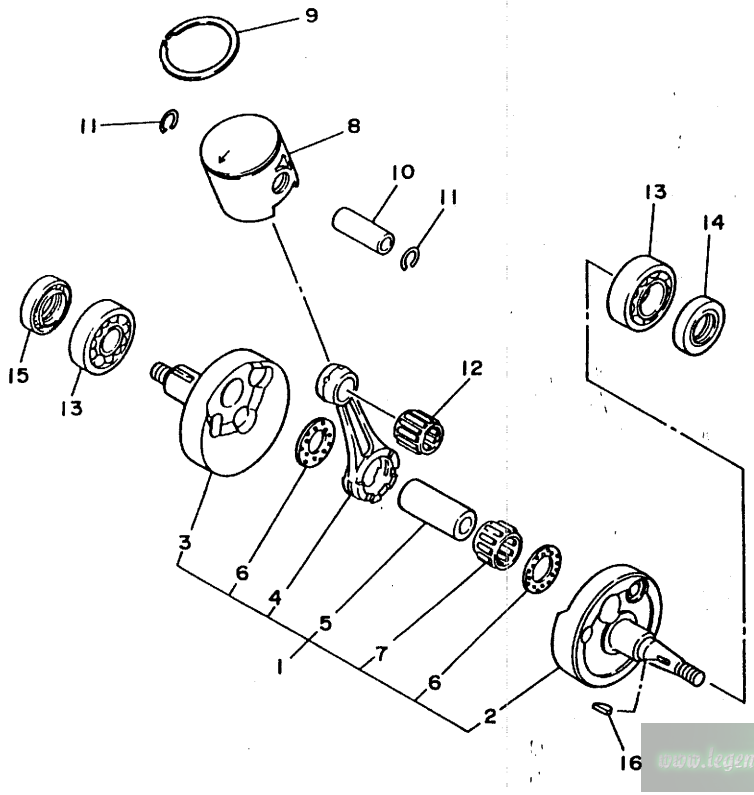

3XJ1100-1030

FIG. 3 CRANKSHAFT. PISTON

REF. NO.	PART NO.	DESCRIPTION	Q'TY	REMARKS
1	4JY-11400-00	CRANKSHAFT ASSY	1	
2	4JY-11412-00	.CRANK 1	1	
3	4JY-11422-00	.CRANK 2	1	
4	2HG-11651-01	.ROD, CONNECTING	1	
5	3JD-11681-01	.PIN, CRANK 1	1	
6	90209-22257	.WASHER	2	
7	93310-522P3	.BEARING, CYLINDRICAL	1	
8	4JY-11631-00-A0	PISTON (STD)	1	UR RED
	4JY-11631-00-B0	PISTON (STD)	1	UR ORANGE
	4JY-11631-00-C0	PISTON (STD)	1	UR GREEN
	4JY-11631-00-D0	PISTON (STD)	1	UR PURPLE
9	4JY-11611-00	RING, PISTON	1	
10	280-11633-00	PIN, PISTON	1	
11	93450-17129	CIRCLIP	2	
12	93310-216L2	BEARING, CYLINDRICAL	1	
13	93306-37204	BEARING (63/22SH2-9TC4)	2	KOYO
14	93102-22363	OIL SEAL	1	
15	93103-32171	OIL SEAL	1	
16	90280-03017	KEY, WOODRUFF	1	

www.legends-yamaha-enduros.com

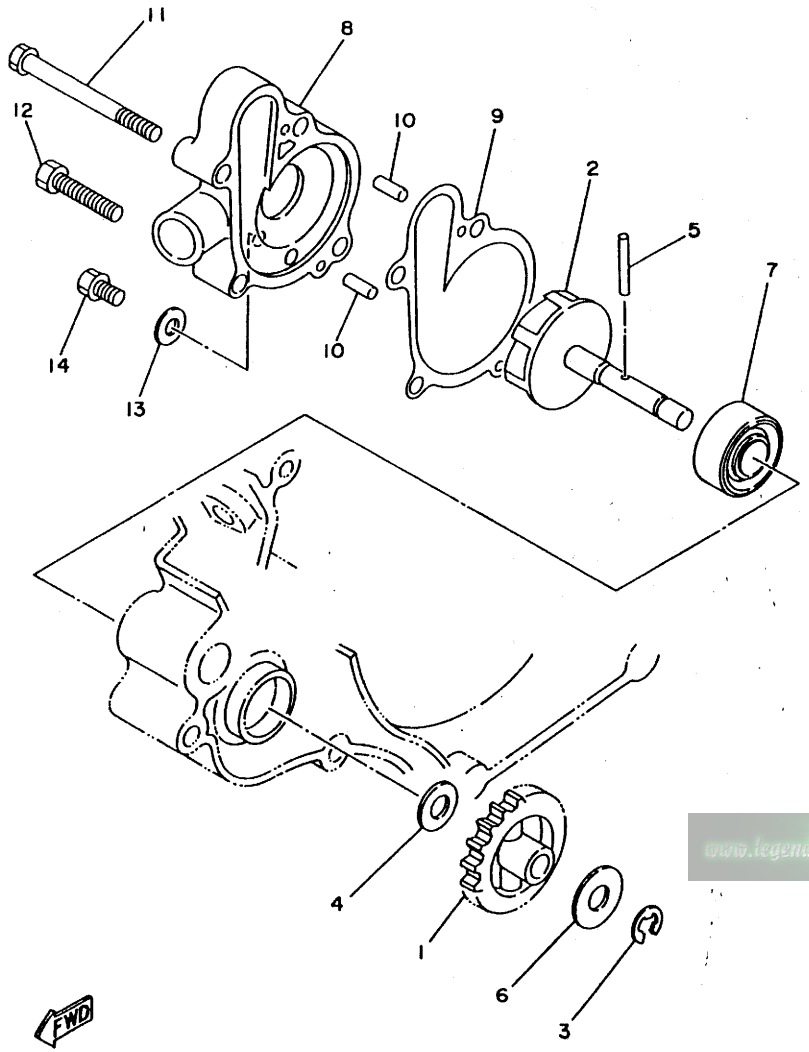

4JY1100-4040

FIG. 4 WATER PUMP

REF. NO.	PART NO.	DESCRIPTION	Q'TY	REMARKS
1	1LX-12459-00	GEAR, IMPELLER SHAFT	1	
2	1LX-12450-00	IMPELLER SHAFT ASSY	1	
3	99080-07600	CIRCLIP	1	
4	90201-08512	WASHER, PLATE	1	
5	93603-22028	PIN, DOWEL	1	
6	90201-08784	WASHER, PLATE	1	
7	93103-10168	OIL SEAL	1	
8	4JY-12422-00	COVER, HOUSING	1	
9	4JY-12428-00	GASKET, HOUSING COVER 2	1	
10	93604-10011	PIN, DOWEL	2	
11	95021-06065	BOLT, FLANGE	2	
12	95023-06030	BOLT	2	
13	90430-06166	GASKET	1	
14	95023-06010	BOLT	1	

www.legends-yamaha-enduros.com

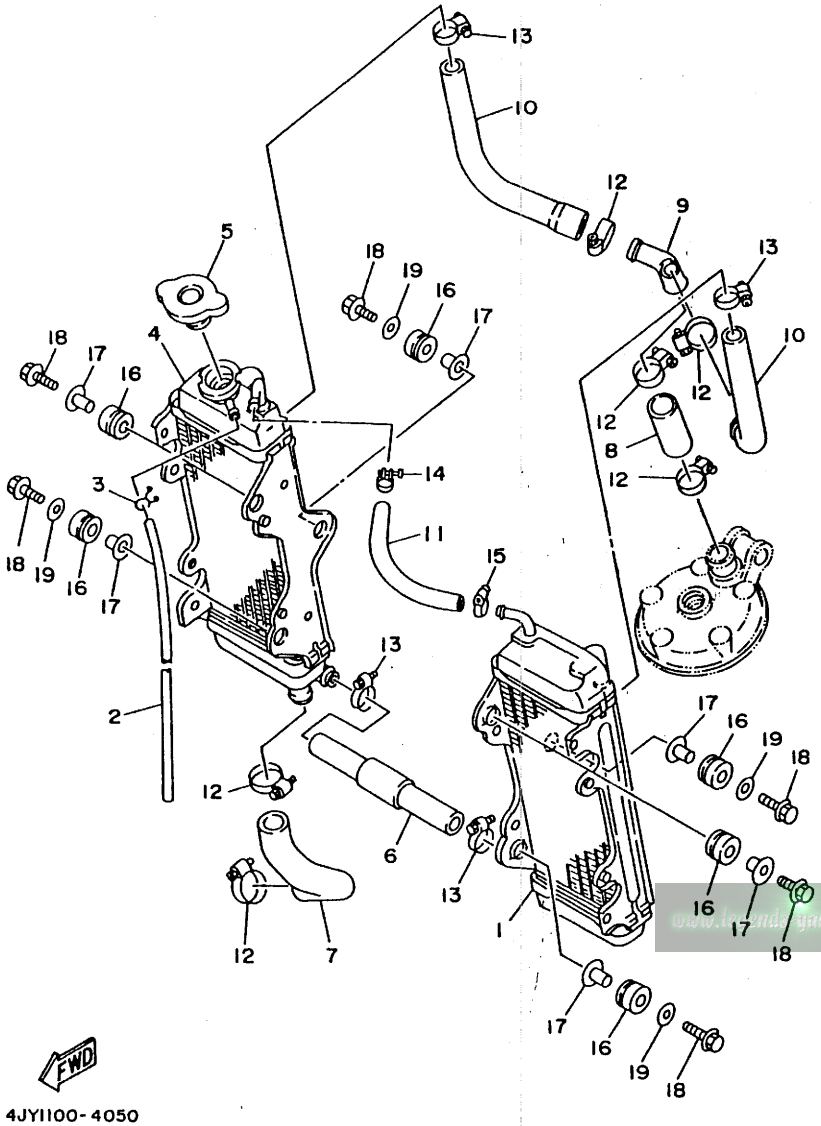

FIG. 5 RADIATOR. HOSE

REF. NO.	PART NO.	DESCRIPTION	Q'TY	REMARKS
1	4EW-1240A-01	RADIATOR ASSY	1	
2	91A20-05065	TUBE, FLEXIBLE VINYL	1	
3	90467-09006	CLIP	1	
4	4EX-12461-00	RADIATOR ASSY	1	
5	22W-12462-00	CAP, RADIATOR	1	
6	4EW-12482-01	PIPE 2	1	
7	4JY-12483-00	PIPE 3	1	
8	3AK-12483-00	PIPE 3	1	
9	4EX-12469-00	JOINT 1	1	
10	4EX-12477-01	PIPE 7	2	
11	4DC-1248A-00	PIPE 8	1	
12	90450-28014	HOSE CLAMP ASSY	6	
13	90450-22052	HOSE CLAMP ASSY	4	
14	90450-15041	HOSE CLAMP ASSY	1	
15	90450-17036	HOSE CLAMP ASSY	1	
16	90480-15528	GROMMET	6	
17	90387-0700G	COLLAR	6	
18	95023-06030	BOLT	6	
19	90201-06067	WASHER, PLATE	4	

www.trendyamaha-enduros.com

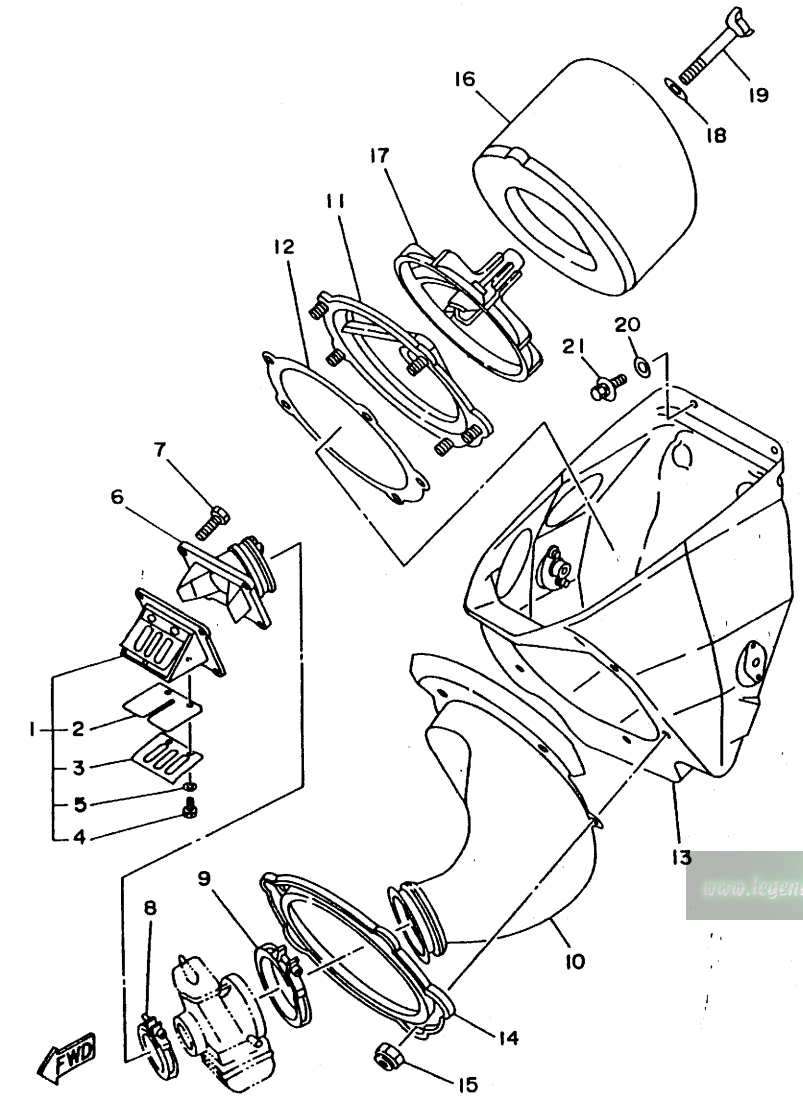

4JY1100-4060

FIG. 6 INTAKE

REF. NO.	PART NO.	DESCRIPTION	Q'TY	REMARKS
1	4JY-13610-00	REED VALVE ASSY	1	
2	4JY-13613-00	.REED, VALVE	2	
3	4JY-13616-00	.STOPPER, REED VALVE	2	
4	98580-03008	.SCREW, PAN HEAD	4	
5	92990-03100	.WASHER, SPRING	4	
6	4JY-13565-00	JOINT, CARBURETOR	1	
7	95023-06020	BOLT	4	
8	90450-51070	HOSE CLAMP ASSY	1	
9	90450-70072	HOSE CLAMP ASSY	1	
10	4EX-14453-02	JOINT, AIR CLEANER 1	1	
11	3JD-14459-00	HOLDER, GUIDE	1	
12	3JD-14462-00	SEAL	1	
13	4EW-14411-02	CASE, AIR CLEANER 1	1	
14	3JD-14477-00	PLATE	1	
15	95601-05100	NUT, U	5	
16	4EW-14451-00	ELEMENT, AIR CLEANER	1	
17	3JD-14458-00	GUIDE	1	
18	90209-06096	WASHER	1	
19	90122-06035	BOLT, WING	1	
20	90201-06571	WASHER, PLATE	2	
21	90105-06553	BOLT, WASHER BASED	2	

www.legends-yamaha-enduros.com

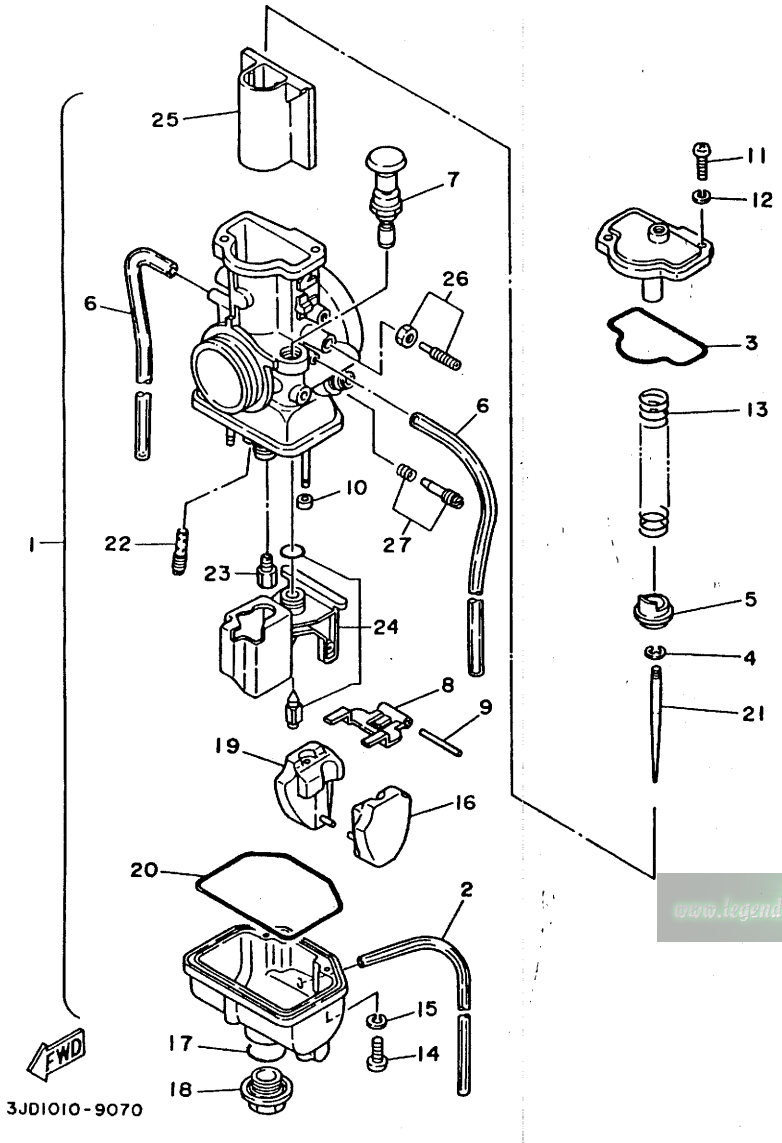

FIG. 7 CARBURETOR

REF. NO.	PART NO.	DESCRIPTION	Q'TY	REMARKS
1	4JY-14101-00	CARBURETOR ASSY 1	1	UR
	4JY-14101-10	CARBURETOR ASSY 1	1	UR FOR EUROPE
	4JY-14101-20	CARBURETOR ASSY 1	1	UR FOR JAPAN
2	3X3-14197-00	.PIPE	1	
3	3JD-14147-00	.O-RING	1	
4	256-14919-00	.CLIP	1	
5	3JD-14194-00	.RING	1	
6	2HH-14197-00	.PIPE	2	
7	3JE-14171-00	.PLUNGER, STARTER	1	
8	363-14187-00	.ARM, FLOAT	1	
9	353-14186-00	.PIN, FLOAT	1	
10	214-14118-00	.CAP	2	
11	98511-04012	.SCREW, PAN HEAD	2	
12	92990-04100	.WASHER, SPRING	2	
13	3JD-14131-00	.SPRING, THROTTLE VALVE	1	
14	98580-03010	.SCREW, PAN HEAD	1	
15	92990-03100	.WASHER, SPRING	1	
16	3XV-14185-10	.FLOAT	1	
17	3JE-14561-00	.O-RING	1	
18	4DB-14115-00	.PLUG, SCREW	1	
19	3XV-14185-00	.FLOAT	1	
20	3JE-14147-00	.O-RING	1	
21	3JD-14116-G0	.NEEDLE (J8-6EJ35-59)	1	STD
	3JD-14116-G1	.NEEDLE (J8-6EJ35-57)	1	AP
	3JD-14116-G2	.NEEDLE (J8-6EJ35-58)	1	AP
	3JD-14116-G3	.NEEDLE (J8-6EJ35-60)	1	AP
	3JD-14116-G4	.NEEDLE (J8-6EJ35-61)	1	AP
22	3H1-14142-15	.JET, PILOT (#15)	1	STD

www.legends-yamaha-enduro.com

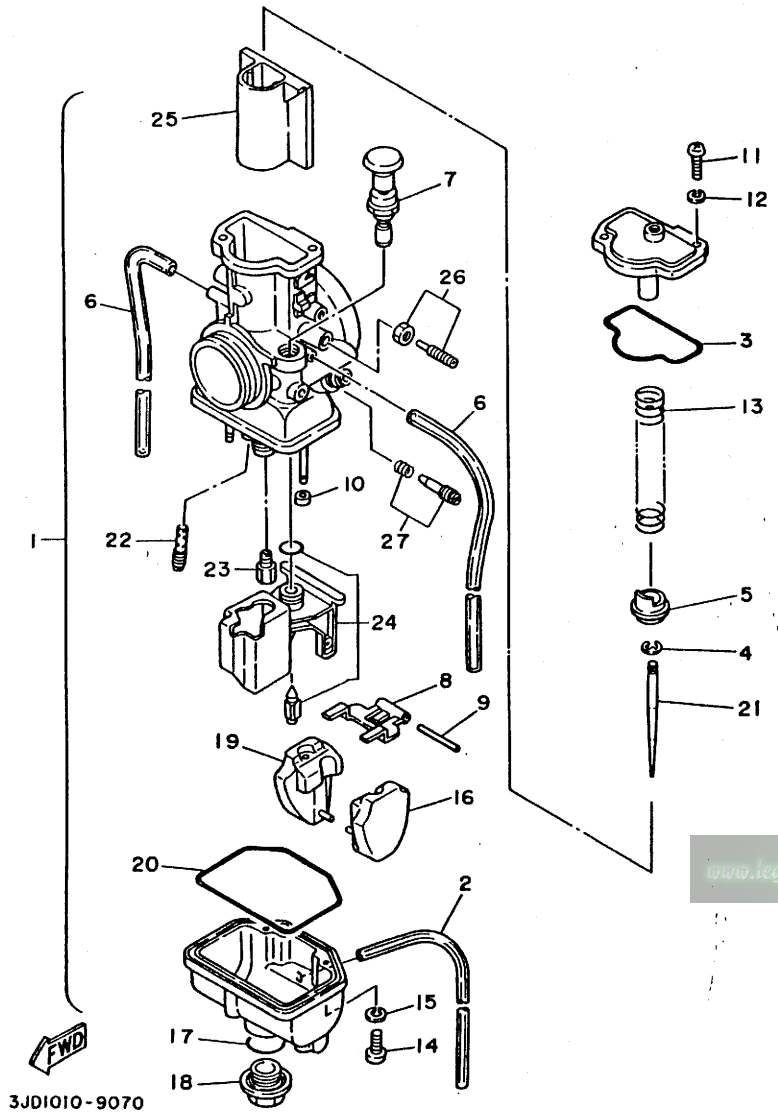

FIG. 7 CARBURETOR

REF. NO.	PART NO.	DESCRIPTION	Q'TY	REMARKS
22	3H1-14142-12	.JET, PILOT (#12.5)	1	AP
	3H1-14142-17	.JET, PILOT (#17.5)	1	AP
	3H1-14142-20	.JET, PILOT (#20)	1	AP
23	137-14143-60-A0	.JET, MAIN (#300)	1	AP
	137-14143-62-A1	.JET, MAIN (#310)	1	AP
	137-14143-64	.JET, MAIN (#320)	1	STD FOR JAPAN
	137-14143-66-A1	.JET, MAIN (#330)	1	STD
	137-14143-68	.JET, MAIN (#340)	1	STD FOR EUROPE
	137-14143-70	.JET, MAIN (#350)	1	AP
	137-14143-72	.JET, MAIN (#360)	1	AP
24	3JD-14107-35	.NEEDLE VALVE SET	1	
25	3JD-14112-50	.VALVE, THROTTLE (C.A 5.0)	1	STD
	3JD-14112-40	.VALVE, THROTTLE (C.A 4.0)	1	AP
	3JD-14112-45	.VALVE, THROTTLE (C.A 4.5)	1	AP
	3JD-14112-55	.VALVE, THROTTLE (C.A 5.5)	1	AP
	3JD-14112-60	.VALVE, THROTTLE (C.A 6.0)	1	AP
26	3JD-14103-00	.THROTTLE SCREW SET	1	
27	3JD-14104-00	.AIR SCREW SET	1	

www.legends-yamaha-enduros.com

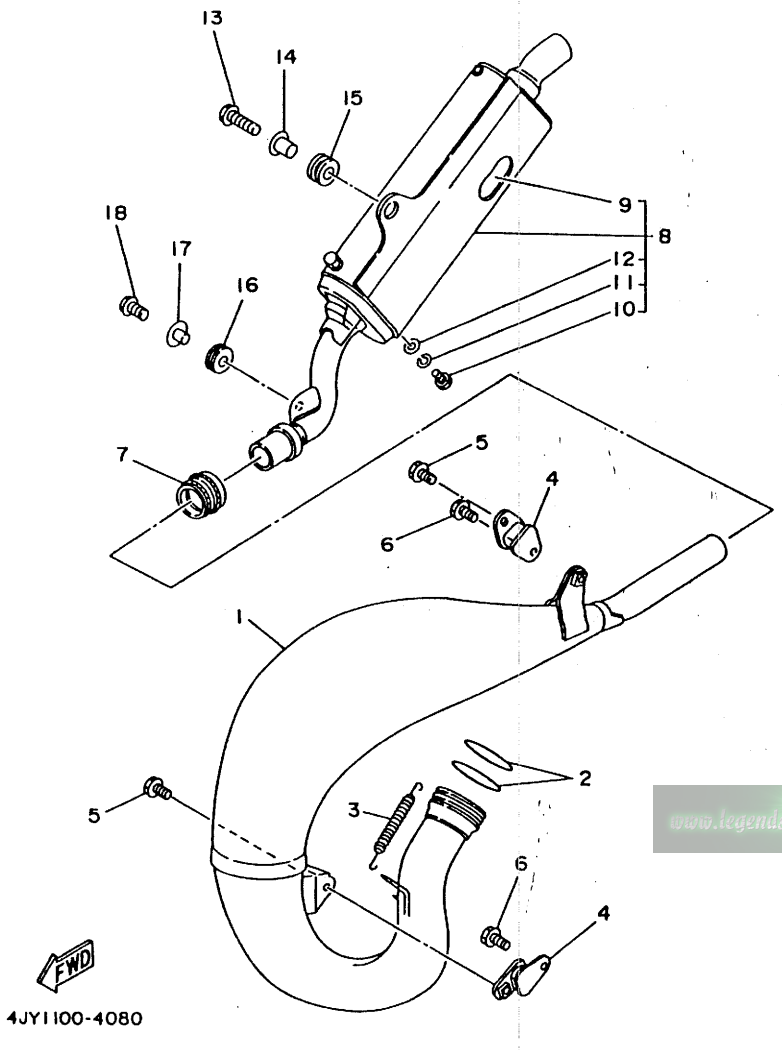

FIG. 8 EXHAUST

REF. NO.	PART NO.	DESCRIPTION	Q'TY	REMARKS
1	4JY-14610-00	EXHAUST PIPE ASSY 1	1	
2	93210-42728	O-RING	2	
3	90507-20052	SPRING, TENSION	2	
4	565-14771-00	STAY, MUFFLER 1	2	
5	95023-06012	BOLT	2	
6	90119-06185	BOLT, WITH WASHER	2	
7	4JY-14615-00	JOINT, EXHAUST 1	1	
8	4JY-14753-00	SILENCER, EXHAUST	1	
9	4JY-1469A-00	.FIBER	1	
10	97011-06010	.BOLT	2	
11	92995-06100	.WASHER, SPRING	2	
12	92901-06600	.WASHER, PLATE	2	
13	95023-06025	BOLT	1	
14	90387-063G3	COLLAR	1	
15	90480-16561	GROMMET	1	
16	90480-10289	GROMMET	1	
17	90387-107R6	COLLAR	1	
18	95023-06016	BOLT	1	

www.legends-yamaha-enduros.com

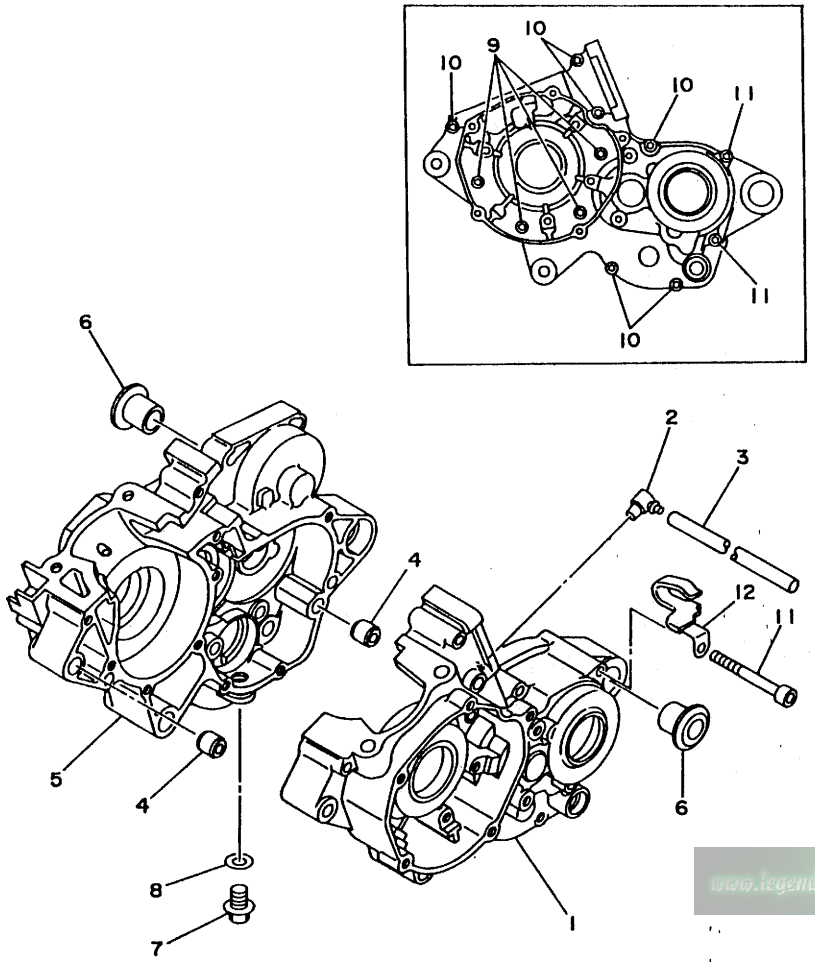

4JY1100-4090

FIG. 9 CRANKCASE

REF. NO.	PART NO.	DESCRIPTION	Q'TY	REMARKS
1	4JY-15111-00	CRANKCASE 1	1	
2	353-13115-01	CONNECTOR, SUCTION PIPE	1	
3	90445-08605	HOSE	1	
4	99510-12016	PIN, DOWEL	2	
5	4JY-15121-00	CRANKCASE 2	1	
6	90387-160H4	COLLAR	2	
7	90340-12097	PLUG, STRAIGHT SCREW	1	
8	90430-12207	GASKET	1	
9	91316-06045	BOLT	4	
10	91316-06055	BOLT	6	
11	91316-06070	BOLT	2	
12	90465-08336	CLAMP	1	

www.legends-yamaha-enduros.com

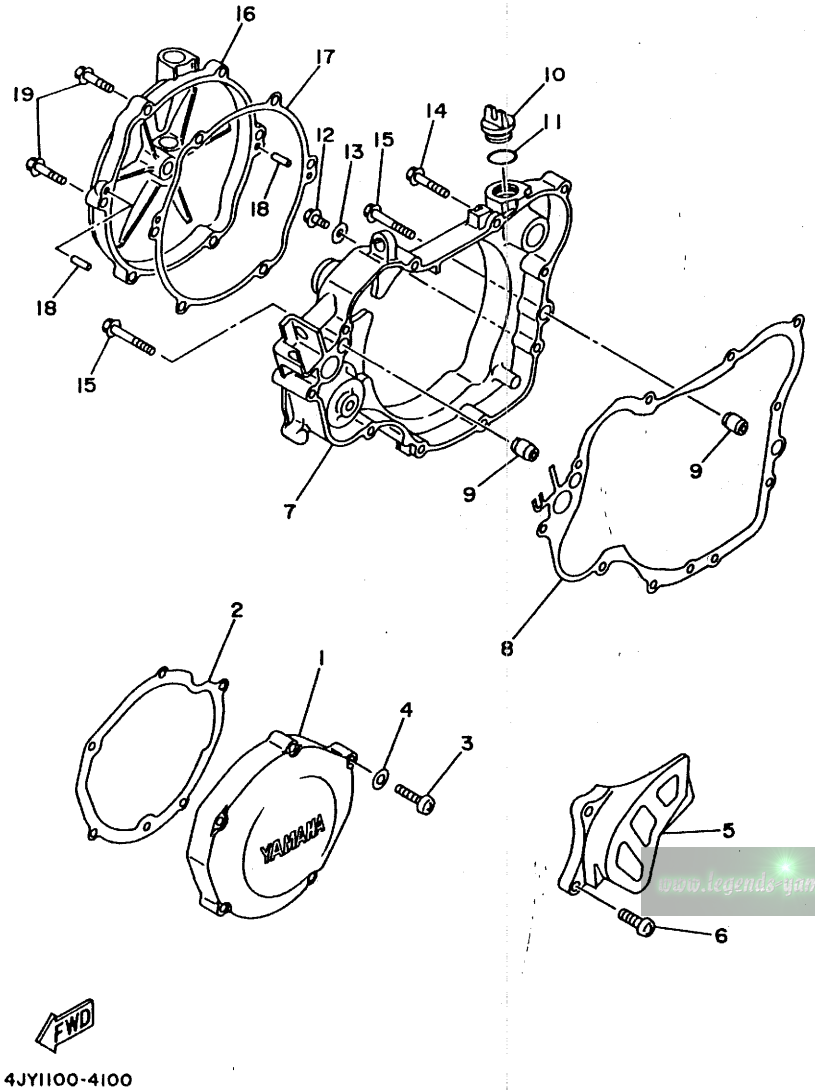

FIG. 10 CRANKCASE COVER 1

REF. NO.	PART NO.	DESCRIPTION	Q'TY	REMARKS
1	4JY-15411-00	COVER, CRANKCASE 1	1	
2	4JY-15451-00	GASKET, CRANKCASE COVER 1	1	
3	98580-06030	SCREW, PAN HEAD	5	
4	92901-06600	WASHER, PLATE	5	
5	4EX-15421-00	COVER, CRANKCASE 2	1	
6	98580-06016	SCREW, PAN HEAD	2	
7	4JY-15431-00	COVER, CRANKCASE 3	1	
8	4JY-15462-00	GASKET, CRANKCASE COVER 3	1	
9	99530-10014	PIN, DOWEL	2	
10	1RG-15363-00	PLUG, OIL	1	
11	93210-19123	O-RING	1	
12	95023-06010	BOLT	1	
13	90430-06014	GASKET	1	
14	95023-06030	BOLT	6	
15	95023-06040	BOLT	2	
16	4JY-15415-00	COVER, GENERATOR	1	
17	4JY-15463-00	GASKET, CARBURETOR COVER 2	1	
18	93604-10011	PIN, DOWEL	2	
19	95023-06025	BOLT	6	

www.legends-yamaha-enduros.com

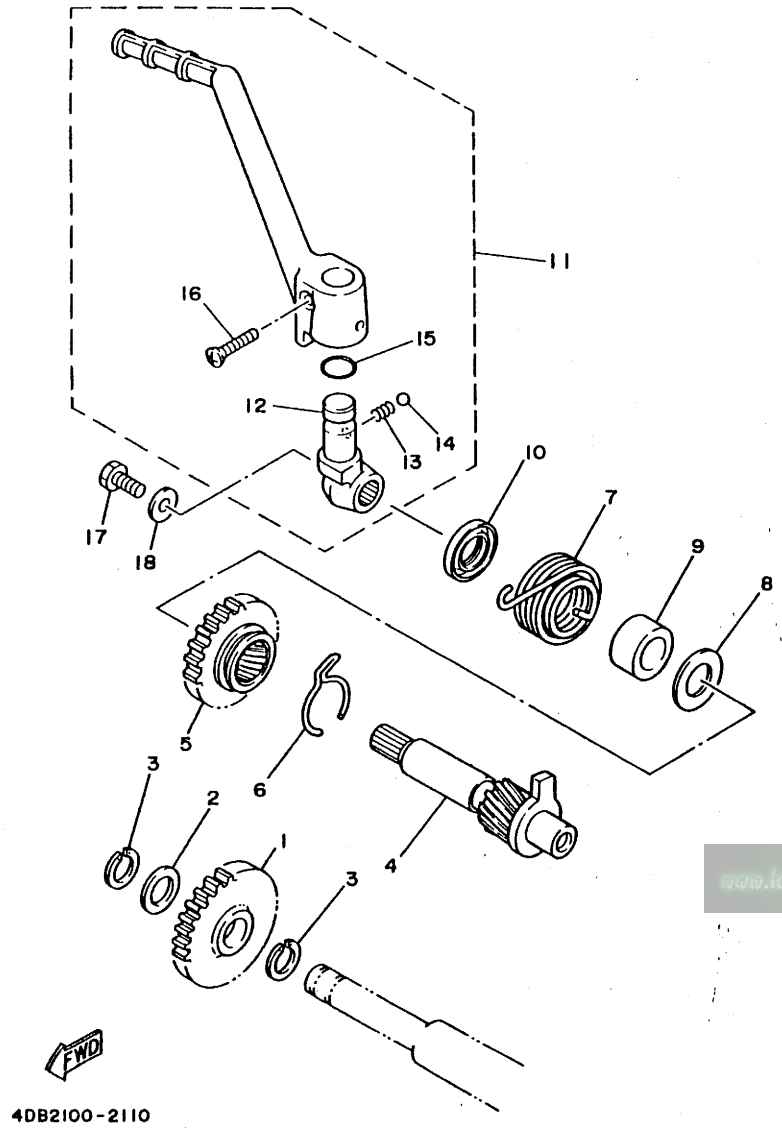

FIG. 11 STARTER

REF. NO.	PART NO.	DESCRIPTION	Q'TY	REMARKS
1	1LX-15651-00	GEAR, KICK IDLE	1	
2	137-17417-00-05	SHIM 1 (0.5T)	1	
3	93440-15012	CIRCLIP	2	
4	1LX-15660-02	KICK AXLE ASSY	1	
5	1LX-15641-00	GEAR, KICK	1	
6	90468-26048	CLIP	1	
7	90508-26450	SPRING, TORSION	1	
8	90201-171G4	WASHER, PLATE	1	
9	90560-17279	SPACER	1	
10	93102-17263	OIL SEAL	1	
11	4DB-15620-03	KICK CRANK ASSY	1	
12	4DB-15621-03	.BOSS, KICK CRANK	1	
13	90501-12081	.SPRING, COMPRESSION	1	
14	93507-32031	.BALL	1	
15	93210-15171	.O-RING	1	
16	90157-06048	.SCREW, PAN HEAD	1	
17	97021-06012	BOLT	1	
18	90201-065F3	WASHER, PLATE	1	

www.legends-yamaha-enduros.com

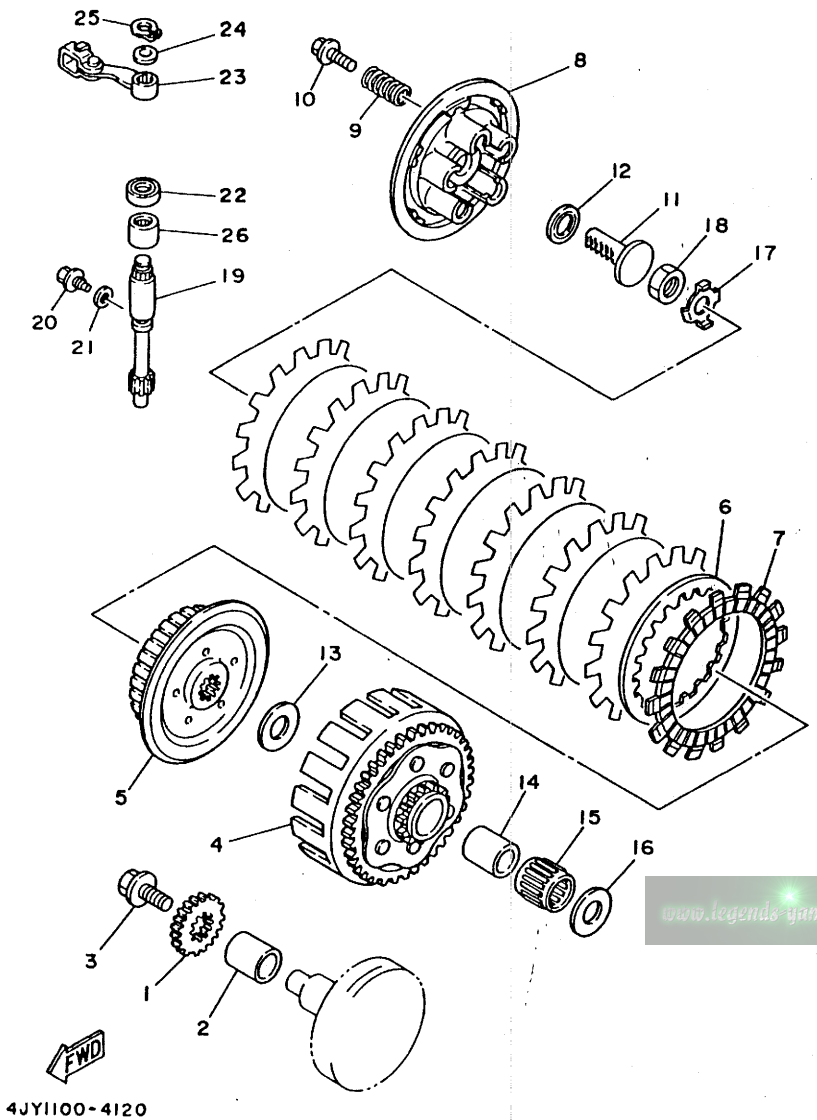

FIG. 12 CLUTCH

REF. NO.	PART NO.	DESCRIPTION	Q'TY	REMARKS
1	3XJ-16111-00	GEAR, PRIMARY DRIVE	1	
2	90387-202T9	COLLAR	1	
3	90105-10445	BOLT, WASHER BASED	1	
4	4JY-16150-00	PRIMARY DRIVEN GEAR COMP.	1	
5	4EX-16371-00	BOSS, CLUTCH	1	
6	3XJ-16324-00	PLATE, CLUTCH 1	7	
7	3XJ-16321-00	PLATE, FRICTION	8	
8	4EX-16351-00	PLATE, PRESSURE 1	1	
9	90501-23598	SPRING, COMPRESSION	5	
10	90159-06016	SCREW, WITH WASHER	5	
11	3SB-16356-00	ROD, PUSH 1	1	
12	93342-21013	BEARING, THRUST	1	
13	90201-204K8	WASHER, PLATE	1	
14	3XJ-16181-00	SPACER 1	1	
15	93310-225N0	BEARING, CYLINDRICAL	1	
16	3XJ-16164-00	PLATE, THRUST 2	1	
17	90215-16245	WASHER, LOCK	1	
18	90170-16326	NUT	1	
19	4EX-16382-00	AXLE, PUSH LEVER	1	
20	90109-06418	BOLT	1	
21	90430-06014	GASKET	1	
22	93102-12224	OIL SEAL	1	
23	3JD-16340-00	PUSH LEVER ASSY	1	
24	90201-10119	WASHER, PLATE	1	
25	99009-10400	CIRCLIP	1	
26	93315-11206	BEARING, CYLINDRICAL	1	

www.legends-yamaha-enduros.com

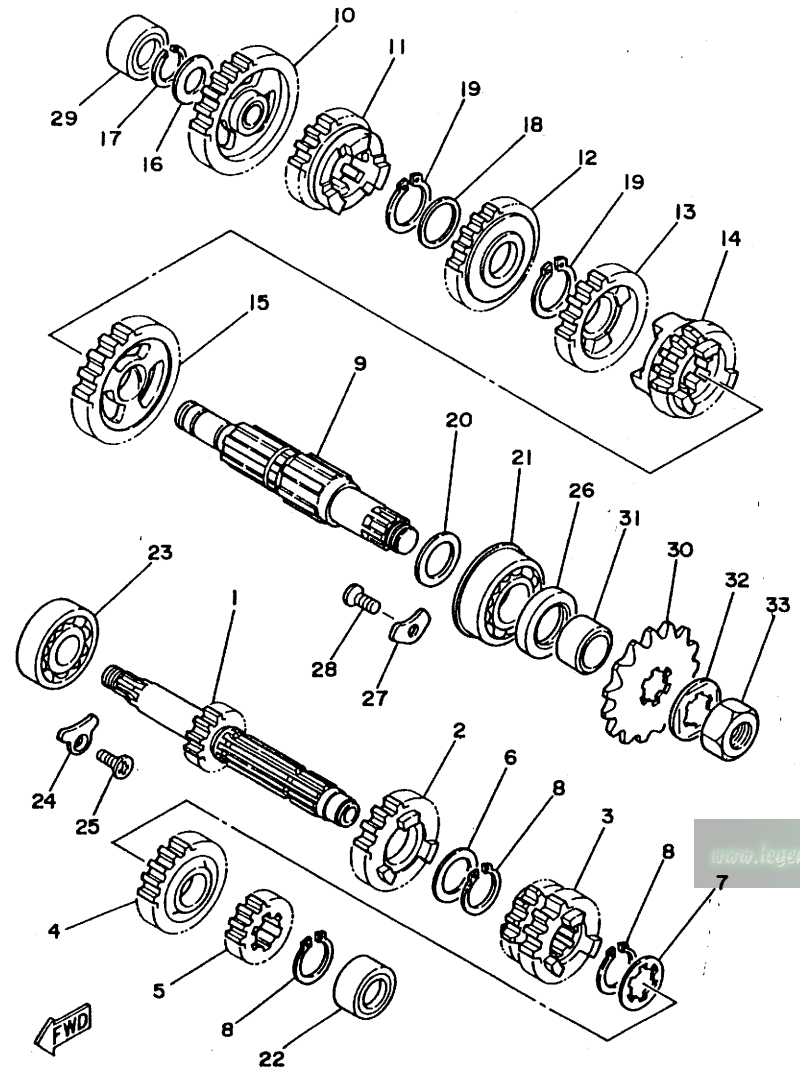

3XJ1100-1130

FIG. 13 TRANSMISSION

REF. NO.	PART NO.	DESCRIPTION	Q'TY	REMARKS
1	3XJ-17411-00	AXLE, MAIN	1	
2	4EX-17151-00	GEAR, 5TH PINION	1	
3	4EX-17131-00	GEAR, 3RD PINION	1	
4	4EX-17161-00	GEAR, 6TH PINION	1	
5	3SR-17121-00	GEAR, 2ND PINION	1	
6	90201-22555	WASHER, PLATE	1	
7	90209-18135	WASHER	1	
8	93410-22039	CIRCLIP	3	
9	3XJ-17421-00	AXLE, DRIVE	1	
10	1LX-17211-01	GEAR, 1ST WHEEL	1	
11	4EX-17251-00	GEAR, 5TH WHEEL	1	
12	3SR-17231-00	GEAR, 3RD WHEEL	1	
13	4EX-17241-00	GEAR, 4TH WHEEL	1	
14	4EX-17261-00	GEAR, 6TH WHEEL	1	
15	3XJ-17221-00	GEAR, 2ND WHEEL	1	
16	90201-15701	WASHER, PLATE (1.0T)	1	
17	99009-15400	CIRCLIP	1	
18	90209-18208	WASHER	1	
19	93410-22039	CIRCLIP	2	
20	90201-206K8	WASHER, PLATE	1	
21	93306-30411	BEARING (B6304)	1	
22	93311-41530	BEARING, CYLINDRICAL	1	
23	93306-20469	BEARING	1	
24	1LX-15383-00	PLATE, BEARING COVER	1	
25	98701-06012	SCREW, FLAT HEAD	1	
26	93102-26042	OIL SEAL	1	
27	3XJ-15383-00	PLATE, BEARING COVER	2	
28	98701-06012	SCREW, FLAT HEAD	2	

www.legends-yamaha.com

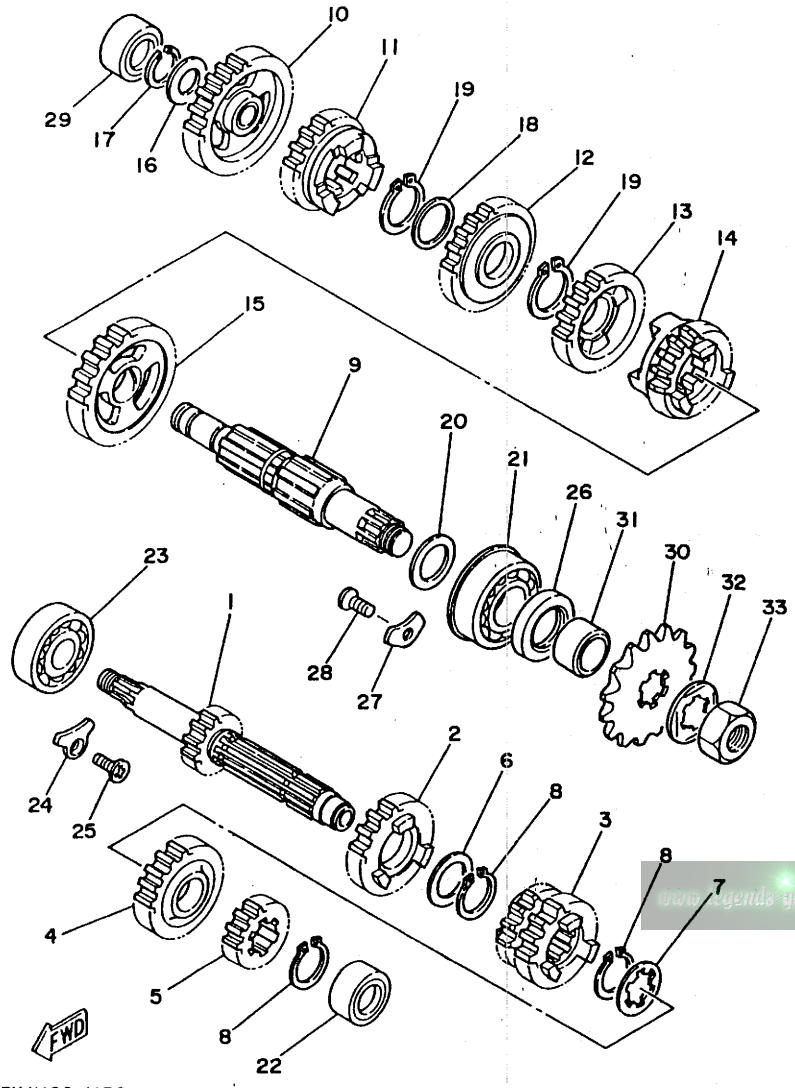

3XJ1100-1130

FIG. 13 TRANSMISSION

REF. NO.	PART NO.	DESCRIPTION	Q'TY	REMARKS
29	93311-31567	BEARING, CYLINDRICAL	1	
30	9383A-13031	SPROCKET,DRIVE 13T (2HG1746130)	1	STD
	9383A-12017	SPROCKET,DRIVE 12T (2HG1746120)	1	AP
	9383A-14054	SPROCKET,DRIVE 14T (2HG1746140)	1	AP
31	90387-202A0	COLLAR	1	
32	90215-20261	WASHER, LOCK	1	
33	90179-16226	NUT	1	

www.legends-yamaha-enduros.com

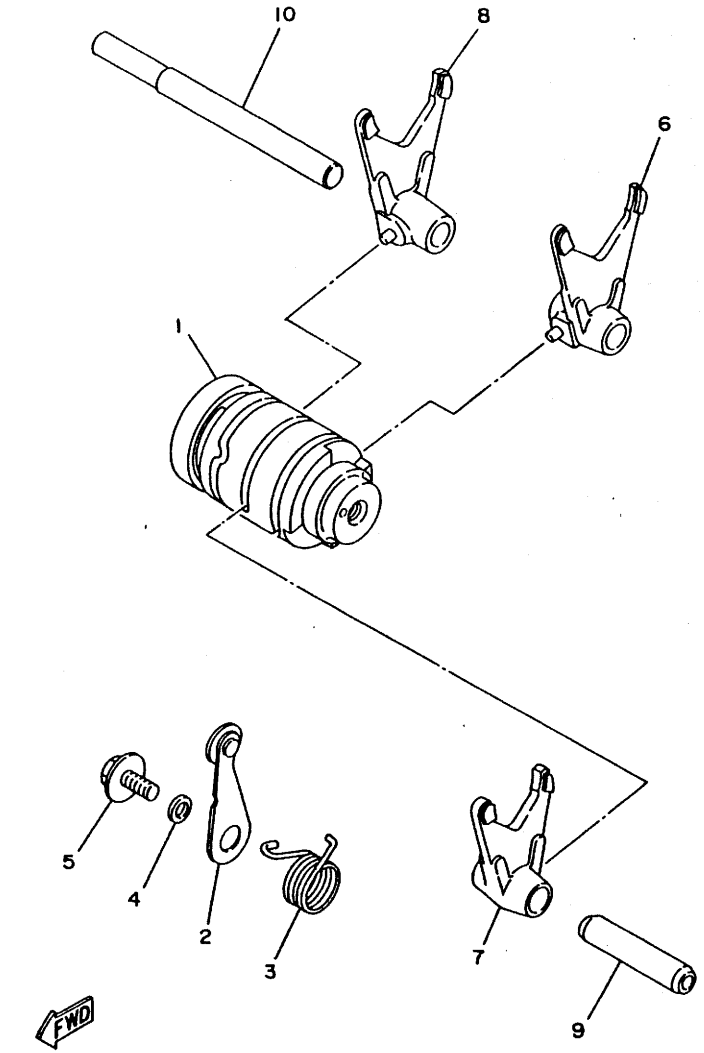

4JY1100-4140

FIG. 14 SHIFT CAM. FORK

REF. NO.	PART NO.	DESCRIPTION	Q'TY	REMARKS
1	4JY-18540-00	SHIFT CAM ASSY	1	
2	4JY-18140-00	STOPPER LEVER ASSY	1	
3	90508-26691	SPRING, TORSION	1	
4	90387-063F7	COLLAR	1	
5	90159-06078	SCREW, WITH WASHER	1	
6	3JD-18511-01	FORK, SHIFT 1	1	
7	2VN-18512-01	FORK, SHIFT 2	1	
8	1LX-18513-01	FORK, SHIFT 3	1	
9	4EX-18531-00	BAR, SHIFT FORK GUIDE 1	1	
10	4EX-18535-00	BAR, SHIFT FORK GUIDE 2	1	

www.legends-yamaha-enduros.com

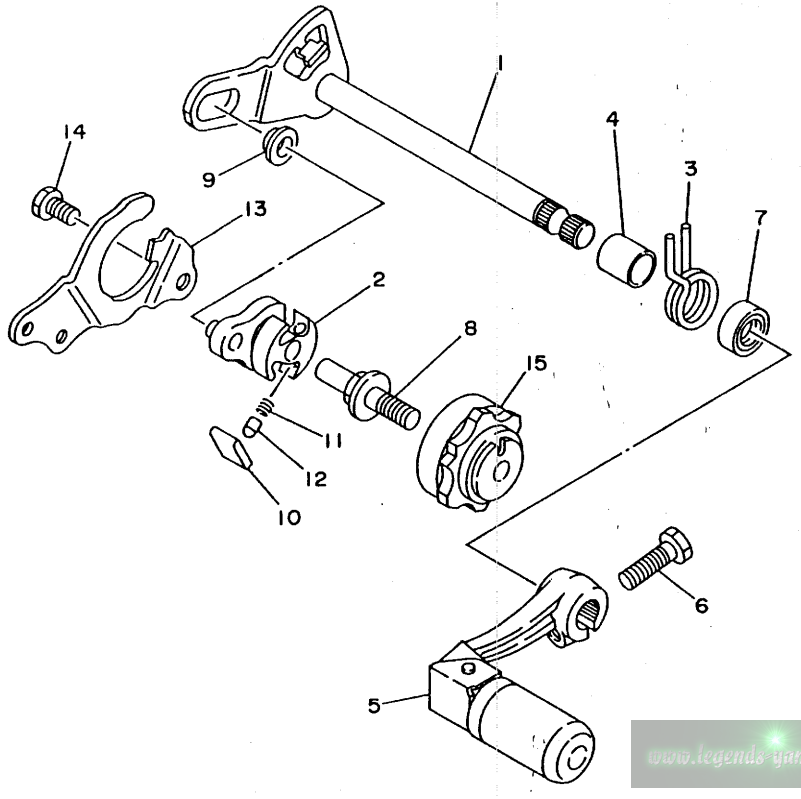

www.legends-yamaha-enduros.com

FIG. 15 SHIFT SHAFT

REF. NO.	PART NO.	DESCRIPTION	Q'TY	REMARKS
1	4JY-18101-00	SHIFT SHAFT ASSY	1	
2	3XJ-18122-00	LEVER, SHIFT 2	1	
3	90508-295A7	SPRING, TORSION	1	
4	90560-12280	SPACER	1	
5	1LX-18110-02	SHIFT PEDAL ASSY	1	
6	97011-06025	BOLT	1	
7	93109-12012	OIL SEAL	1	
8	3XJ-18173-00	PIN, SHIFT	1	
9	3XJ-18178-00	ROLLER, SHIFT LEVER	1	
10	3XJ-18182-00	PAWL, SHIFTER	2	
11	90501-052G5	SPRING, COMPRESSION	2	
12	3XJ-18184-00	PIN, PAWL	2	
13	4JY-18172-00	GUIDE, SHIFT	1	
14	90101-06664	BOLT	2	
15	4EW-18185-00	SEGMENT	1	

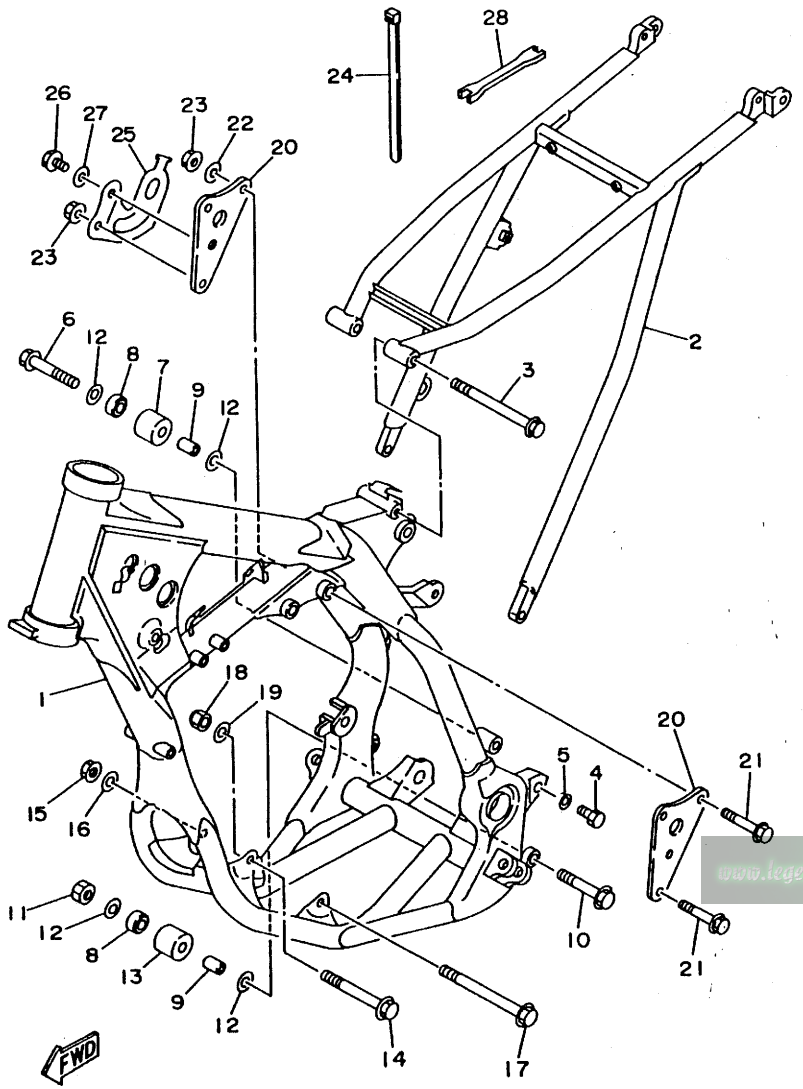

4JY1100-4160

FIG. 16 FRAME

REF. NO.	PART NO.	DESCRIPTION	Q'TY	REMARKS
1	4JY-21101-00-P0	FRONT FRAME COMP.	1	DEEP VIOLET SOLID 1
2	4JY-21190-00-P0	REAR FRAME COMP.	1	DEEP VIOLET SOLID 1
3	90105-08120	BOLT, WASHER BASED	1	
4	90106-08051	BOLT	2	
5	90201-080E2	WASHER, PLATE	2	
6	95023-08040	BOLT	1	
7	4EW-22178-00	TENSIONER	1	
8	93300-60804	BEARING	2	
9	90387-086N4	COLLAR	2	
10	95021-08065	BOLT, FLANGE	1	
11	95311-08700	NUT	1	
12	90201-086P8	WASHER, PLATE	4	
13	3JD-22178-10	TENSIONER	1	
14	95811-08090	BOLT, FLANGE	1	
15	95611-08100	NUT, U	1	
16	90201-08326	WASHER, PLATE	1	
17	91011-10120	BOLT, FLANGE	1	
18	95611-10100	NUT, U	1	
19	90201-101J1	WASHER, PLATE	1	
20	4JY-21425-00	BRACKET, REAR UPPER 1	2	
21	95811-08050	BOLT, FLANGE	3	
22	90201-08730	WASHER, PLATE	2	
23	95611-08200	NUT, SELF-LOCKING	3	
24	12R-82591-00	BAND	1	
25	4JY-21274-00	BRACKET, C.D.I. UNIT	1	
26	90105-06452	BOLT, WASHER BASED	1	
27	90201-067J4	WASHER, PLATE	1	
28	56A-28166-00	WRENCH, HEXAGON	1	

www.legends-yamaha.com

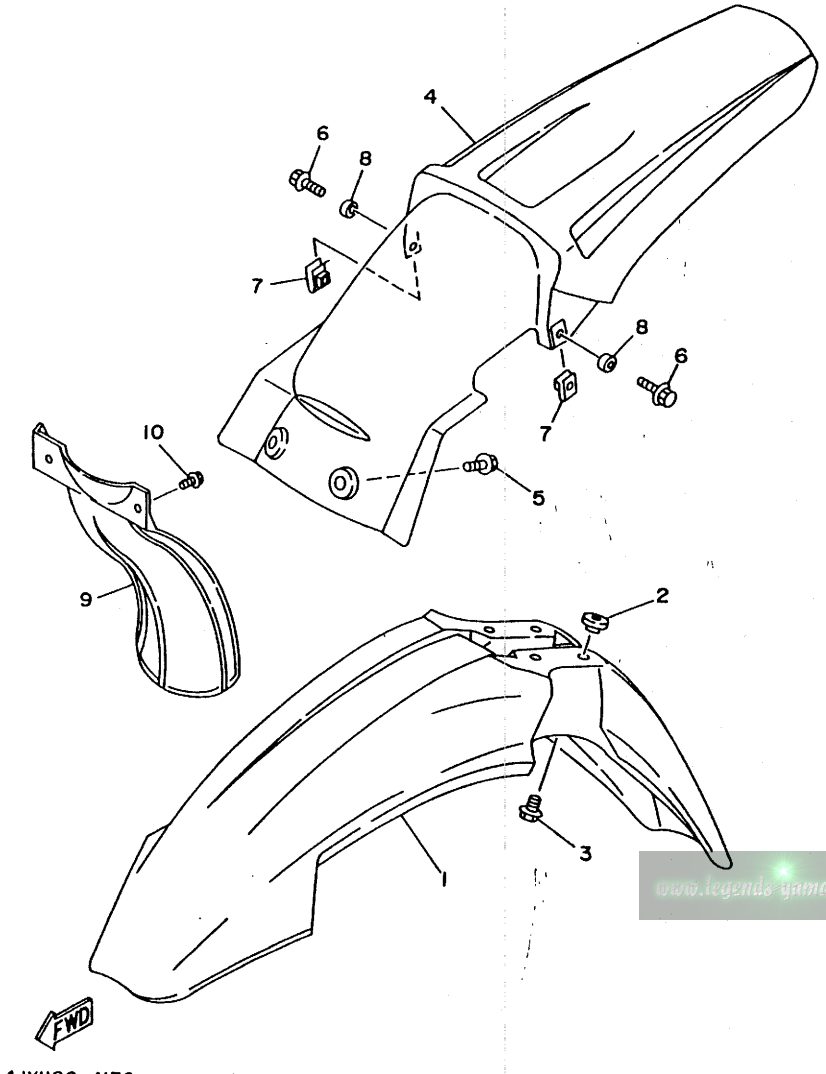

4JY1100-4170

FIG. 17 FENDER

REF. NO.	PART NO.	DESCRIPTION	Q'TY	REMARKS
1	4DA-21511-00	FENDER, FRONT	1	
2	3JD-21748-00	COLLAR	4	
3	90119-06063	BOLT, WITH WASHER	4	
4	4EW-21611-00	FENDER, REAR	1	
5	90119-06185	BOLT, WITH WASHER	2	
6	95023-06016	BOLT	2	
7	90183-06023	NUT, SPRING	2	
8	90387-0701A	COLLAR	2	
9	39X-21642-00	GUARD, FLAP	1	
10	90119-06185	BOLT, WITH WASHER	2	

www.legends-yamaha-enduros.com

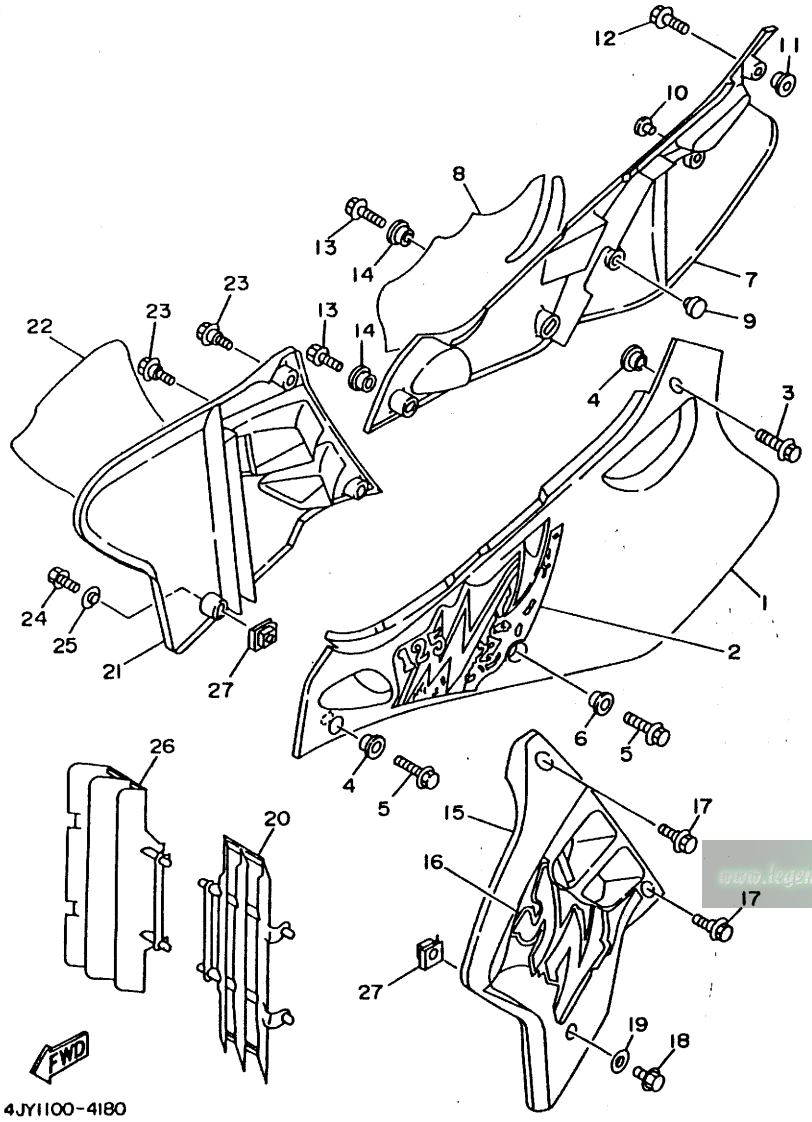

FIG. 18 SIDE COVER

REF. NO.	PART NO.	DESCRIPTION	Q'TY	REMARKS
1	4EW-21711-00	COVER, SIDE 1	1	
2	4JY-2173E-00	GRAPHIC 1	1	
3	90119-06225	BOLT, WITH WASHER	1	
4	90387-0600F	COLLAR	2	
5	95023-06012	BOLT	2	
6	90387-0600F	COLLAR	1	
7	4EW-21721-00	COVER, SIDE 2	1	
8	4JY-2173F-00	GRAPHIC 2	1	
9	22W-24181-00	DAMPER, LOCATING 1	1	
10	90338-10132	PLUG	1	
11	90387-0600F	COLLAR	1	
12	90119-06225	BOLT, WITH WASHER	1	
13	95023-06012	BOLT	2	
14	90387-0600F	COLLAR	2	
15	4EW-21731-00	COVER, SIDE 3	1	
16	4JX-2174G-00	GRAPHIC 3	1	
17	90109-067F4	BOLT	2	
18	95021-06014	BOLT, FLANGE	1	
19	90387-0603J	COLLAR	1	
20	4EW-2172A-00	PANEL 1	1	
21	4EW-21741-00	COVER, SIDE 4	1	
22	4JX-2174H-00	GRAPHIC 4	1	
23	90109-067F4	BOLT	2	
24	95021-06014	BOLT, FLANGE	1	
25	90387-0603J	COLLAR	1	
26	4EW-2172A-00	PANEL 1	1	
27	90183-06069	NUT, SPRING	2	

www.legends-yamaha.com

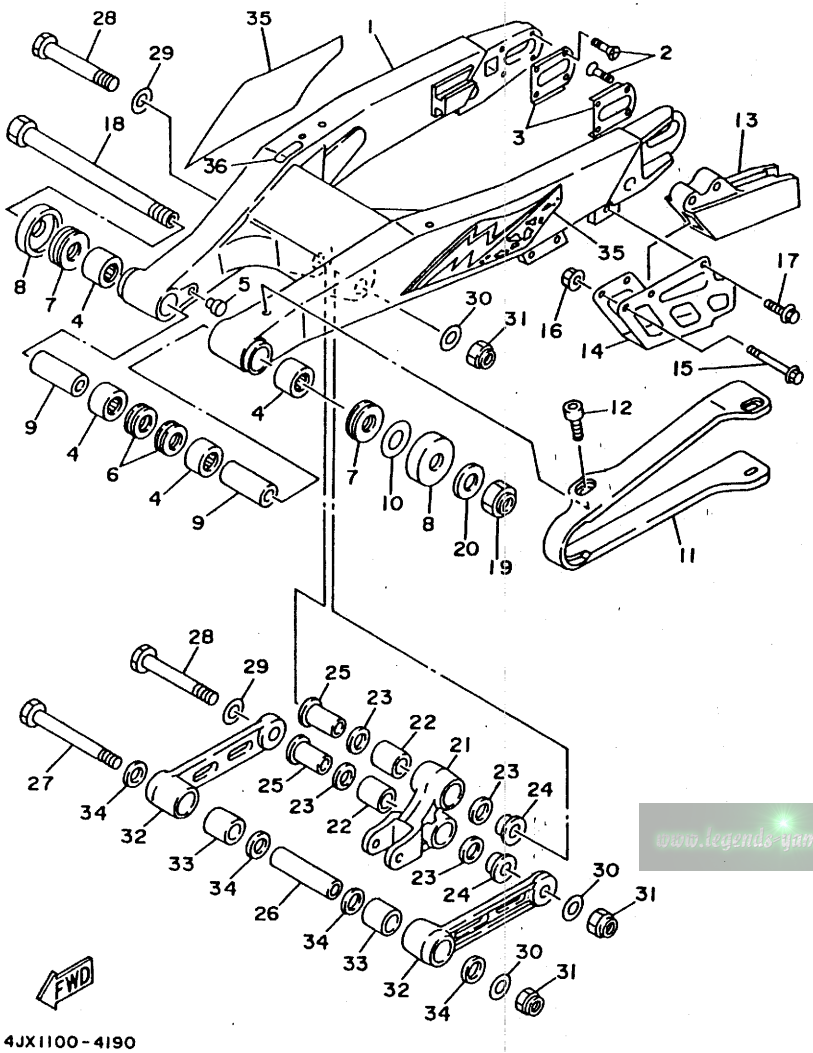

4JX1100-4190

FIG. 19 REAR ARM

REF. NO.	PART NO.	DESCRIPTION	Q'TY	REMARKS
1	4EW-22110-02	REAR ARM COMP.	1	
2	90151-04048	SCREW, COUNTERSUNK	8	
3	4JX-22355-01	PATCH A	2	
4	93317-22262	BEARING, CYLINDRICAL	4	
5	90338-10150	PLUG	2	
6	93106-22019	OIL SEAL (DC 22-28-8)	2	
7	93342-22215	BEARING, THRUST	2	
8	4EW-22129-00	COVER, THRUST 2	2	
9	90380-16158	BUSH, SOLID	2	
10	156-22127-00	SHIM (0.3T)	1	UN
11	4EW-22151-01	SEAL, GUARD	1	
12	90110-05201	BOLT, HEXAGON SOCKET HEAD	4	
13	4EW-22199-01	SUPPORT, CHAIN	1	
14	4EW-22128-00	COVER, THRUST 1	1	
15	95021-06045	BOLT, FLANGE	2	
16	90179-06568	NUT	2	
17	95023-06010	BOLT	1	
18	1LX-22141-00	SHAFT, PIVOT	1	
19	90185-16127	NUT, SELF-LOCKING	1	
20	90201-164H4	WASHER, PLATE	1	
21	4EW-2217A-00	ARM, RELAY	1	
22	93315-22046	BEARING, CYLINDRICAL	2	
23	93109-20029	OIL SEAL	4	
24	90387-164N2	COLLAR	2	
25	90387-164N3	COLLAR	2	
26	90387-167Y9	COLLAR	1	
27	90109-147F2	BOLT	1	
28	90109-142F4	BOLT	2	

www.legends-yamaha-enduros.com

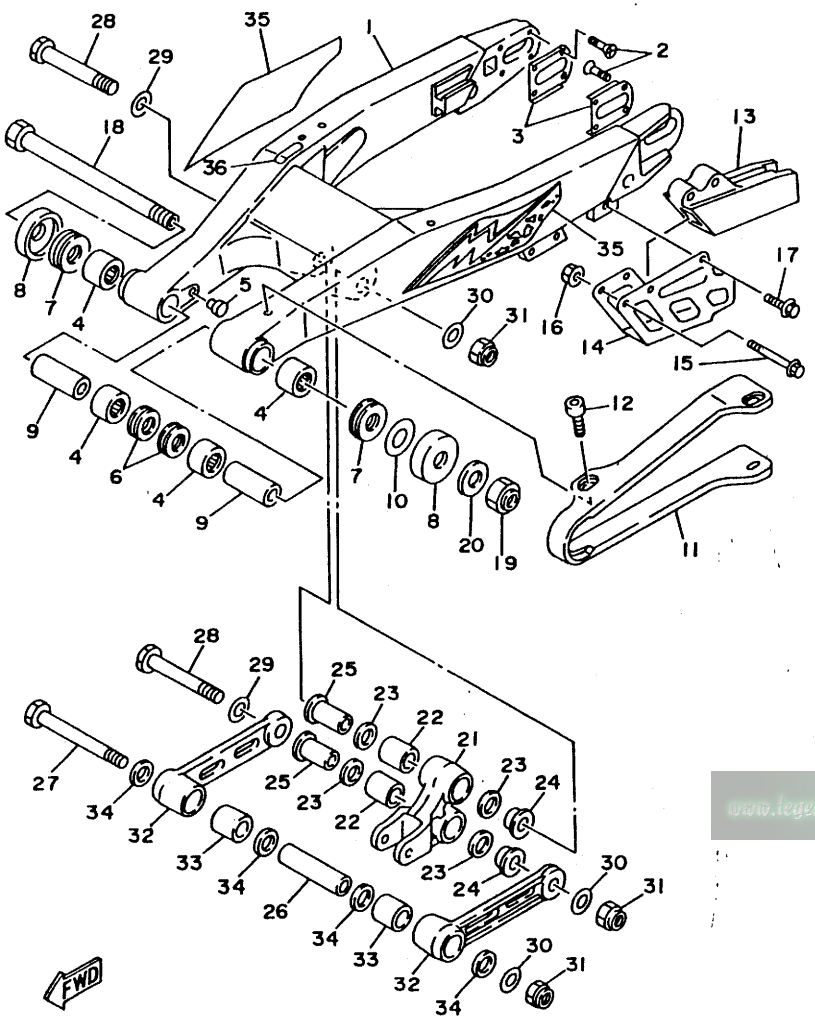

4JX1100-4190

FIG. 19 REAR ARM

REF. NO.	PART NO.	DESCRIPTION	Q'TY	REMARKS
29	90201-164H4	WASHER, PLATE	2	
30	90201-14740	WASHER, PLATE	3	
31	90185-14070	NUT, SELF-LOCKING	3	
32	4EW-2217F-00	ROD, CONNECTING 1	2	
33	93315-22046	BEARING, CYLINDRICAL	2	
34	93109-20029	OIL SEAL	4	
35	4JX-22180-02	EMBLEM	1	
36	46X-21269-00	SEAL	1	

www.legends-yamaha-enduros.com

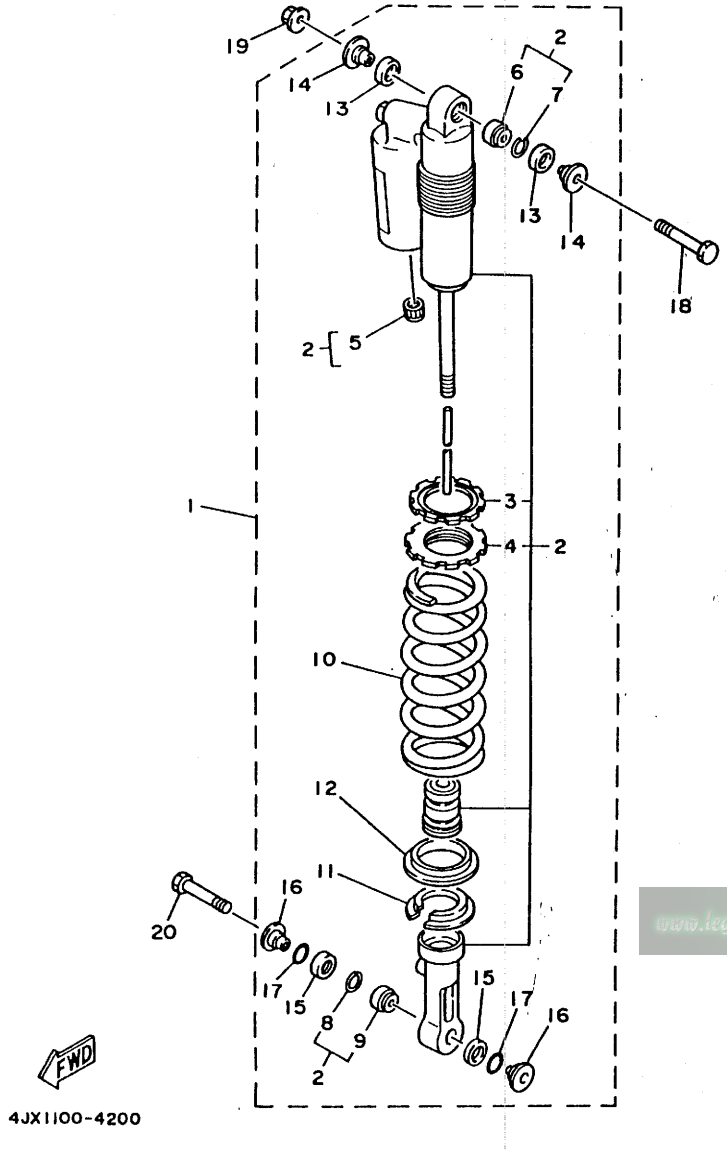

FIG. 20 REAR SUSPENSION

REF. NO.	PART NO.	DESCRIPTION	Q'TY	REMARKS
1	4JY-22210-10	SHOCK ABSORBER ASSY, REAR	1	UR FOR U.S.A.
	4JY-22210-00	SHOCK ABSORBER ASSY, REAR	1	UR FOR EUROPE,OCEANIA, S.AFRICA
	4JY-22210-20	SHOCK ABSORBER ASSY, REAR	1	UR FOR JAPAN
	4JY-22210-30	SHOCK ABSORBER ASSY, REAR	1	UR FOR CANADA
2	4JY-22201-10	.DAMPER SUB ASSY	1	UR FOR U.S.A.
	4JY-22201-00	.DAMPER SUB ASSY	1	UR FOR EUROPE,OCEANIA, S.AFRICA
	4JY-22201-20	.DAMPER SUB ASSY	1	UR FOR JAPAN
	4JY-22201-30	.DAMPER SUB ASSY	1	UR FOR CANADA
3	3SP-22234-00	..GUIDE, SPRING 3	1	
4	3SP-22213-00	..SEAT, SPRING UPPER	1	
5	24M-23184-00	..CAP, AIR VALVE	1	
6	3JD-22216-00	..BUSH, REAR SHOCK ABSORBER	1	
7	43M-22274-00	..RING, STOP	1	
8	3Y6-23183-00	..CIRCLIP	1	
9	4JX-22226-00	..BUSH, SHOCK ABSORBER LOWER	1	
10	4JX-22212-30	.SPRING (K=4.8)	1	
11	3JD-22214-00	.GUIDE, SPRING 1	1	
12	3JD-22224-00	.GUIDE, SPRING 2	1	
13	3JD-22475-00	.SEAL, DUST	2	
14	3XJ-22253-00	.COLLAR, DISTANCE	2	
15	3JE-22475-00	.SEAL, DUST	2	
16	4EW-22253-00	.COLLAR, DISTANCE	2	
17	4EW-22474-00	.SEAL, RING	2	
18	3SP-22241-00	BOLT 1	1	
19	95611-10200	NUT, SELF-LOCKING	1	
20	90105-10614	BOLT, WASHER BASED	1	

www.legends-yamaha-enduro.com

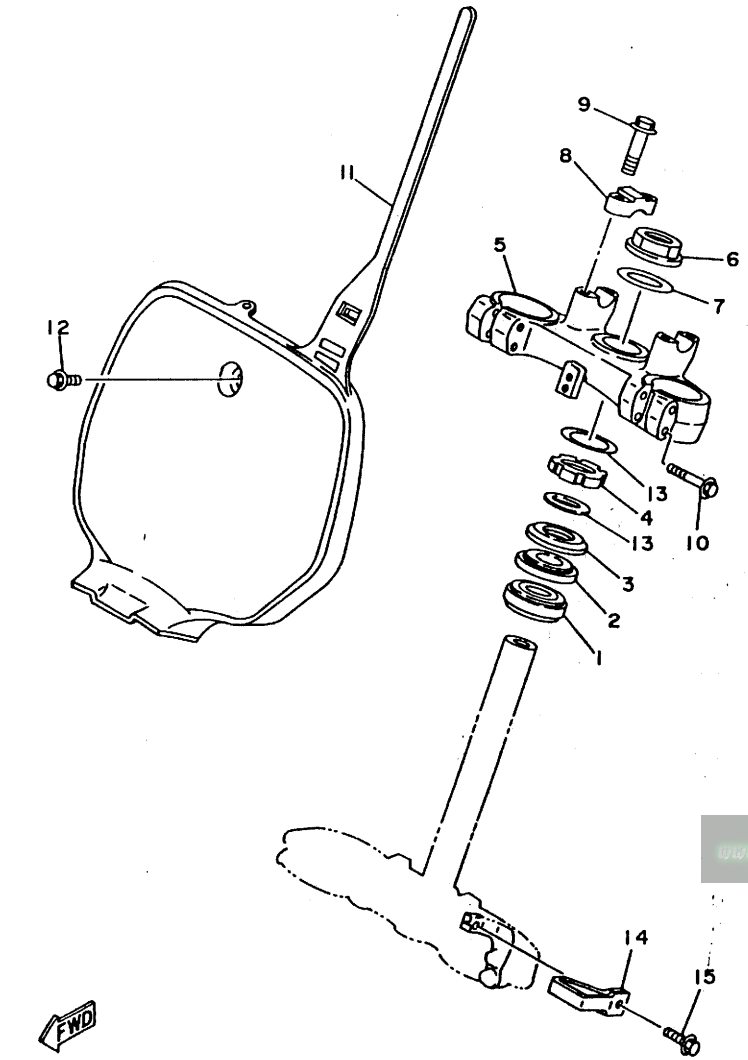

4JX1100-4210

FIG. 21 STEERING

REF. NO.	PART NO.	DESCRIPTION	Q'TY	REMARKS
1	93332-00078	BEARING	1	
2	93332-00068	BEARING	1	
3	4EW-23416-00	COVER, BALL RACE 2	1	
4	90179-28650	NUT	1	
5	4JX-23435-00	CROWN, HANDLE	1	
6	90170-24373	NUT	1	
7	90201-247L2	WASHER, PLATE	1	
8	3SP-23441-00	HOLDER, HANDLE UPPER	2	
9	95023-08035	BOLT	4	
10	95023-08040	BOLT	4	
11	4DA-23485-01	PLATE, NUMBER	1	
12	90119-06185	BOLT, WITH WASHER	1	
13	90201-286K9	WASHER, PLATE	2	
14	4DA-23389-00	GUIDE, CABLE	1	
15	90105-05361	BOLT, WASHER BASED	1	

www.legends-yamaha-enduros.com

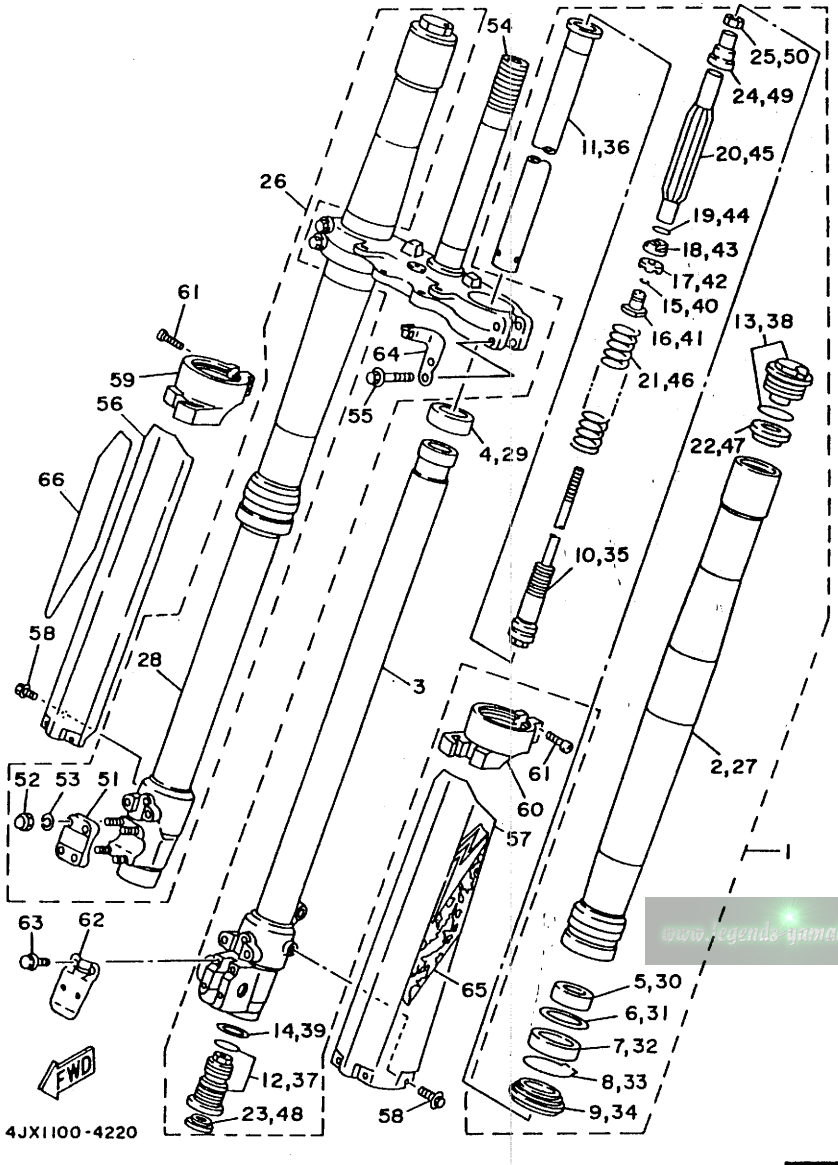

FIG. 22 FRONT FORK

REF. NO.	PART NO.	DESCRIPTION	Q'TY	REMARKS
1	4JY-23102-L0	FRONT FORK ASSY (L.H)	1	UR
	4JY-23102-M0	FRONT FORK ASSY (L.H)	1	UR FOR JAPAN
2	4JX-23136-L0	.TUBE, OUTER (RIGHT)	1	
3	4EW-23120-L0	.INNER TUBE COMP. 2	1	
4	3XJ-23171-L0	.PISTON, FRONT FORK	1	
5	4EW-23125-L0	.METAL, SLIDE 1	1	
6	4V4-23146-L0	.WASHER, OIL SEAL	1	
7	3XJ-23145-L0	.OIL SEAL	1	
8	4V4-23153-L0	.RING, SNAP	1	
9	4DA-23144-L0	.SEAL, DUST	1	
10	4JX-2314A-L0	.PISTON ROD ASSY	1	UR
	4JX-2314A-M0	.PISTON ROD ASSY	1	UR FOR JAPAN
11	4JX-23170-L0	.CYLINDER COMP., FRONT FORK	1	
12	4JY-2316A-L0	.VALVE COMP.	1	UR
	4JY-2316A-M0	.VALVE COMP.	1	UR FOR JAPAN
13	4EW-23111-L0	.BOLT, CAP	1	
14	3JD-23158-L0	.GASKET	1	
15	3SP-23153-L0	.RING, SNAP	2	
16	3SP-23113-L0	.COLLAR	1	
17	3SP-23166-L0	.SPACER, OIL LOCK	1	
18	3SP-23393-L0	.NUT, SPECIAL	1	
19	3JD-23147-L0	.O-RING	1	
20	4JX-23142-L0	.SEAT, SPRING UPPER	1	
21	3XK-23141-L0	.SPRING, FRONT FORK (K=0.390)	1	
22	3XJ-23143-L0	.SEAT, SPRING LOWER	1	
23	3JD-2312G-L0	.PLUG	1	
24	4JX-23363-L0	.COLLAR 1	1	
25	3SP-23357-L0	.NUT	1	

www.legends-yamaha-enduros.

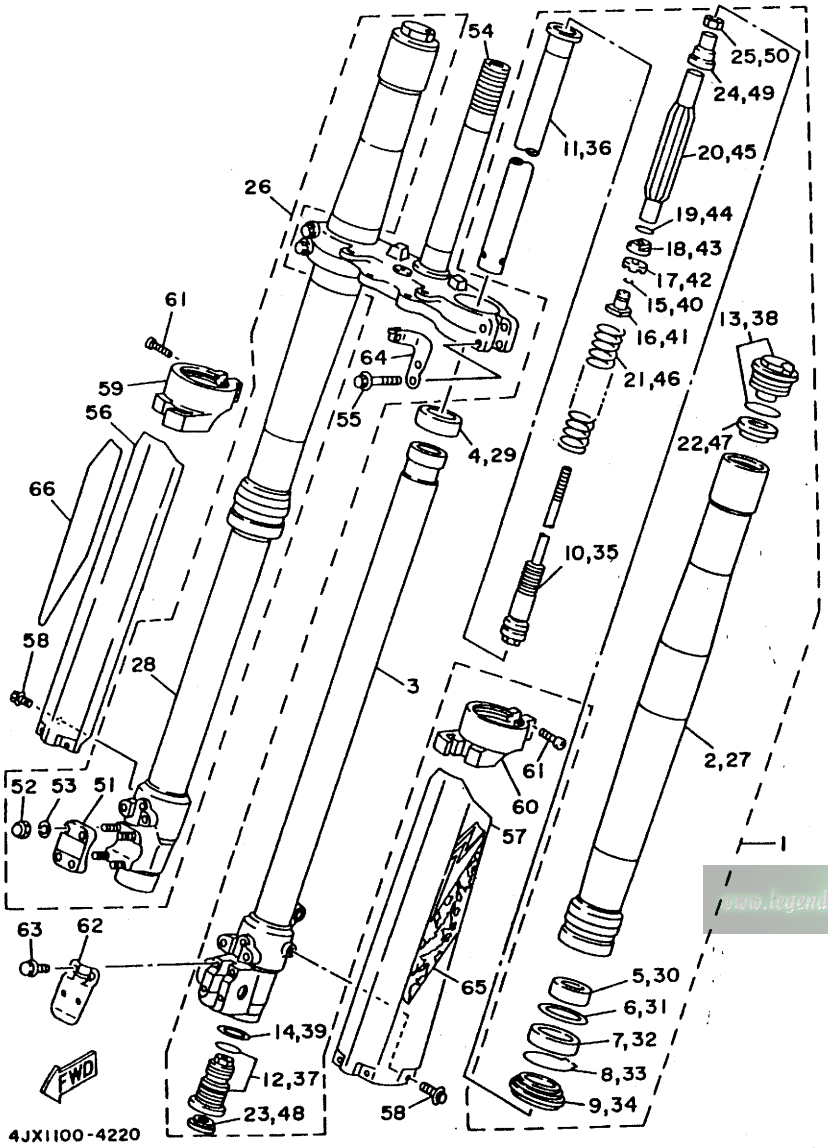

FIG. 22 FRONT FORK

REF. NO.	PART NO.	DESCRIPTION	Q'TY	REMARKS
26	4JY-23103-LO	FRONT FORK ASSY (R.H)	1	UR
	4JY-23103-MO	FRONT FORK ASSY (R.H)	1	UR FOR JAPAN
27	4JX-23136-LO	.TUBE, OUTER (RIGHT)	1	
28	4EW-23110-LO	.INNER TUBE COMP. 1	1	
29	3XJ-23171-LO	.PISTON, FRONT FORK	1	
30	4EW-23125-LO	.METAL, SLIDE 1	1	
31	4V4-23146-LO	.WASHER, OIL SEAL	1	
32	3XJ-23145-LO	.OIL SEAL	1	
33	4V4-23153-LO	.RING, SNAP	1	
34	4DA-23144-LO	.SEAL, DUST	1	
35	4JX-2314A-LO	.PISTON ROD ASSY	1	UR
	4JX-2314A-MO	.PISTON ROD ASSY	1	UR FOR JAPAN
36	4JX-23170-LO	.CYLINDER COMP., FRONT FORK	1	
37	4JY-2316A-LO	.VALVE COMP.	1	UR
	4JY-2316A-MO	.VALVE COMP.	1	UR FOR JAPAN
38	4EW-23111-LO	.BOLT, CAP	1	
39	3JD-23158-LO	.GASKET	1	
40	3SP-23153-LO	.RING, SNAP	2	
41	3SP-23113-LO	.COLLAR	1	
42	3SP-23166-LO	.SPACER, OIL LOCK	1	
43	3SP-23393-LO	.NUT, SPECIAL	1	
44	3JD-23147-LO	.O-RING	1	
45	4JX-23142-LO	.SEAT, SPRING UPPER	1	
46	3XK-23141-LO	.SPRING, FRONT FORK (K=0.390)	1	
47	3XJ-23143-LO	.SEAT, SPRING LOWER	1	
48	3JD-2312G-LO	.PLUG	1	
49	4JX-23363-LO	.COLLAR 1	1	
50	3SP-23357-LO	.NUT	1	

www.legends-yamaha.com

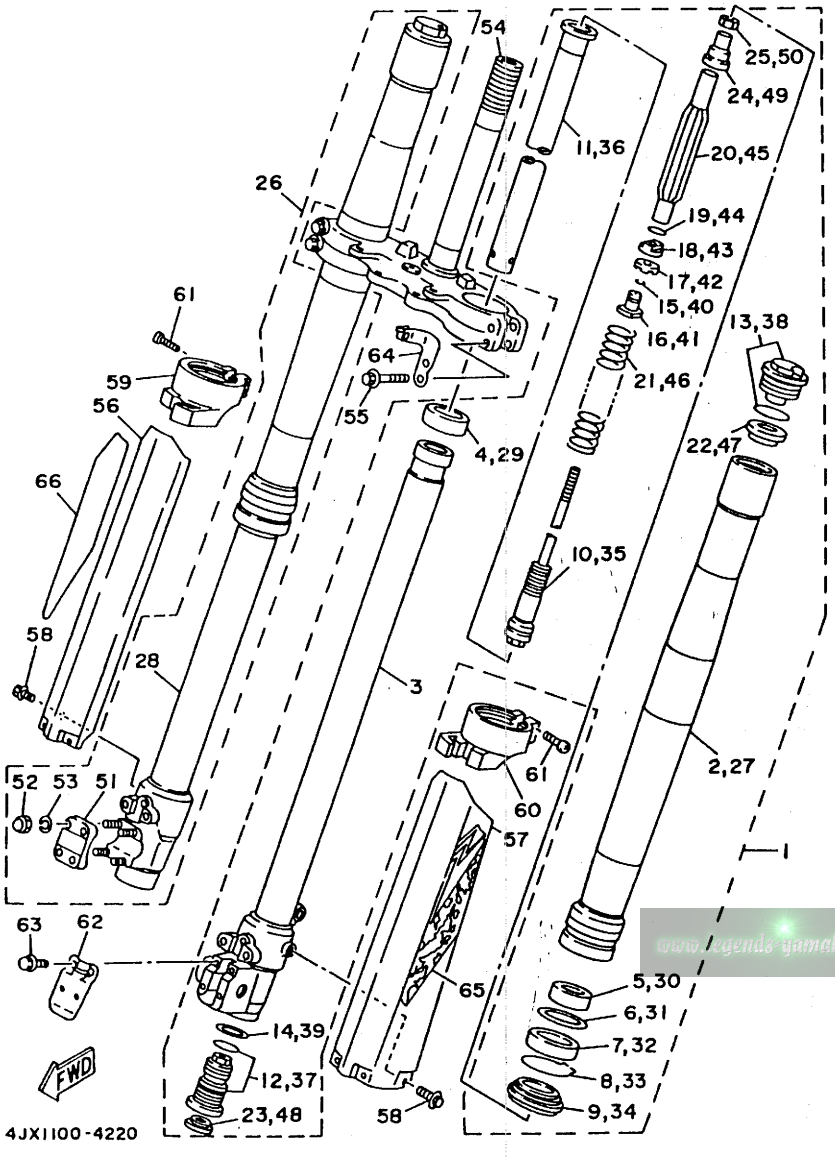

FIG. 22 FRONT FORK

REF. NO.	PART NO.	DESCRIPTION	Q'TY	REMARKS
51	4EW-23167-L0	.HOLDER, AXLE	1	
52	5Y3-23393-00	.NUT, SPECIAL	4	
53	92901-06600	.WASHER, PLATE	4	
54	4JY-23340-L0	UNDER BRACKET COMP.	1	
55	95023-08040	BOLT	4	
56	4DA-2314J-L0	PROTECTER COMP., 2	1	
57	4DA-2314H-L1	PROTECTER COMP., 1	1	
58	3SP-23356-L0	BOLT 2	6	
59	4DA-2314G-L0	PROTECTER GUIDE COMP., 2	1	
60	4DA-2314F-L0	PROTECTER GUIDE COMP., 1	1	
61	4V4-23194-L0	SCREW, BOOT BAND	4	
62	4EW-2314E-L0	COVER, HOSE	1	
63	4DA-23346-L0	BOLT 1	4	
64	4EW-2331E-L0	GUIDE, CABLE	1	
65	4JX-2313B-00	EMBLEM 1	1	
66	4JX-2313C-00	EMBLEM 2	1	

www.legends-yamaha-enduros.com

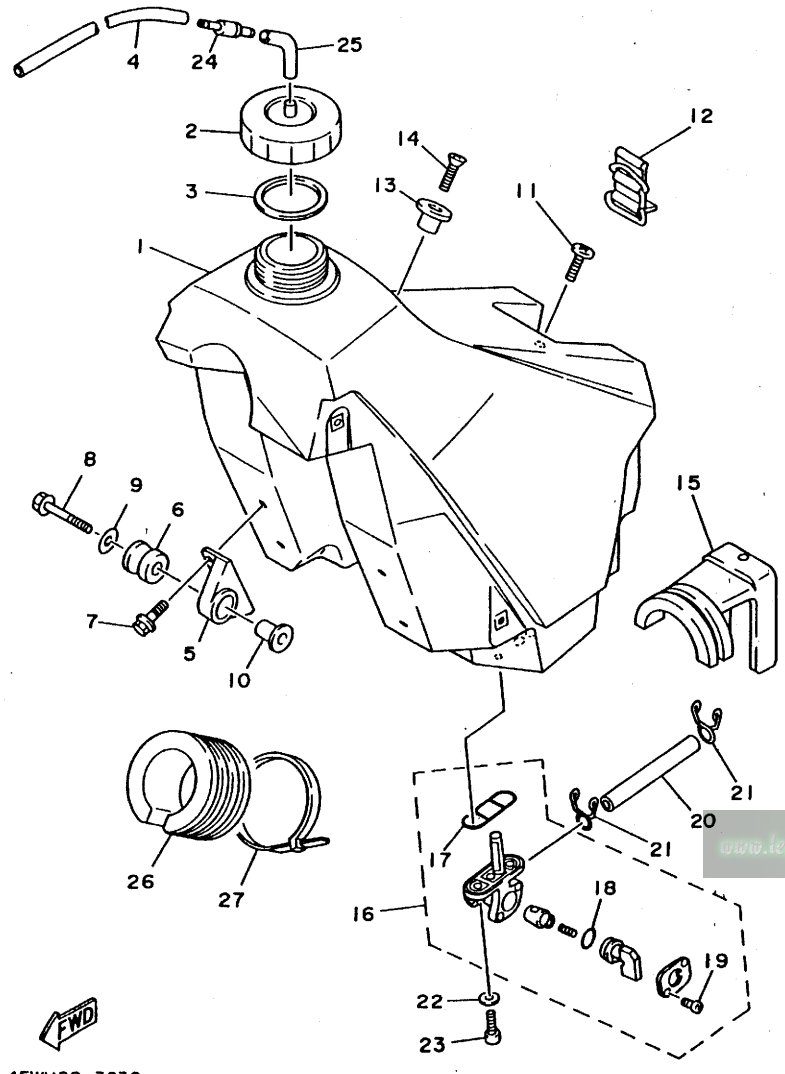

4EW1100-3230

FIG. 23 FUEL TANK

REF. NO.	PART NO.	DESCRIPTION	Q'TY	REMARKS
1	4EW-24110-00	FUEL TANK COMP.	1	
2	5X7-24611-01	BODY, CAP	1	
3	5X7-24612-00	GASKET, CAP	1	
4	90445-09100	HOSE	1	
5	24X-24144-00	HOLDER, DAMPER	2	
6	90480-18549	GROMMET	2	
7	95023-06016	BOLT	4	
8	95023-06035	BOLT	2	
9	90201-06697	WASHER, PLATE	2	
10	3JD-24186-00	WASHER, SPECIAL	2	
11	98980-06020	SCREW, BIND	1	
12	3SP-24173-00	BAND, TANK FITTING 1	1	
13	4EW-2412F-00	BRACKET, SEAT	1	
14	98701-06025	SCREW, FLAT HEAD	1	
15	4EW-24181-00	DAMPER, LOCATING 1	1	
16	3JD-24500-01	FUEL COCK ASSY 1	1	
17	4X8-24512-00	.O-RING	1	
18	3AJ-24534-00	.SEAL, COCK	1	
19	98503-03008	.SCREW, PAN HEAD	2	
20	90445-114H6	HOSE	1	
21	90467-10008	CLIP	2	
22	90202-05187	WASHER, PLATE	2	
23	90149-06011	SCREW	2	
24	3XJ-24380-00	PIPE JOINT ASSY	1	
25	90445-09058	HOSE	1	
26	4EW-24182-00	DAMPER, LOCATING 2	1	
27	90464-14117	CLAMP	1	

www.legends-yamaha.com

FIG. 24 SEAT

REF. NO.	PART NO.	DESCRIPTION	Q'TY	REMARKS
1	4JX-24770-00	SEMI-DOUBLE SEAT ASSY	1	
2	4JX-24731-00	.COVER, SEAT	1	
3	4EW-24728-00	.BRACKET, SEAT	1	
4	4EW-24738-00	.BRACKET, SEAT	1	
5	95023-06016	.BOLT	4	

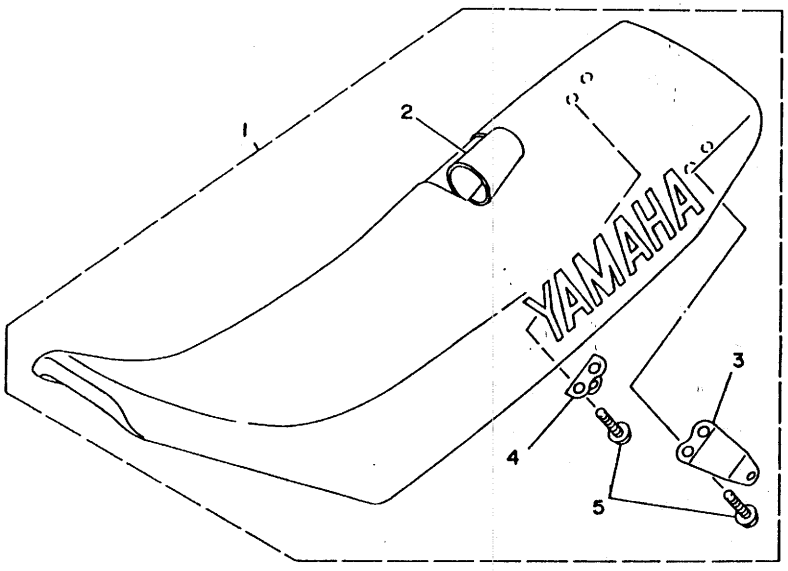

www.legends-yamaha-enduros.com

4EW1100-3241

FIG. 25 FRONT WHEEL

REF. NO.	PART NO.	DESCRIPTION	Q'TY	REMARKS
1	4EW-25111-00	HUB, FRONT	1	
2	93306-00316	BEARING	2	
3	90560-17379	SPACER	1	
4	93106-22032	OIL SEAL	2	
5	146-25116-00	FLANGE, SPACER 2	1	
6	94416-21509	RIM (1.60-21)	1	
7	4DA-25104-00	SPOKE SET, FRONT	1	
8	94108-217X2	TIRE (80/100-21 K490)	1	UR DUNLOP
	94108-2102V	TIRE (80/100-21 51M D752F)	1	UR DUNLOP FOR EUROPE
9	94227-21123	TUBE (2.75-21)	1	BRIDGESTONE
10	94307-21145	BAND, RIM (70-80/100-21)	1	DUNLOP
11	5X2-25394-00	SPACER, BEAD	1	
12	4DA-25181-00	AXLE, WHEEL	1	
13	90387-173Y0	COLLAR	1	
14	90387-172Y9	COLLAR	1	

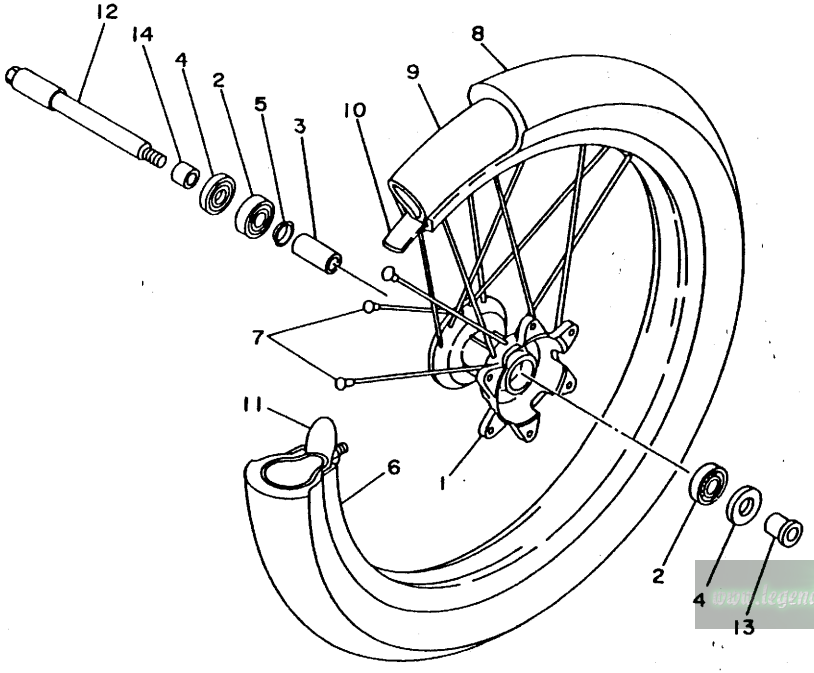

4EW1100-3250

www.legends-yamaha-enduros.com

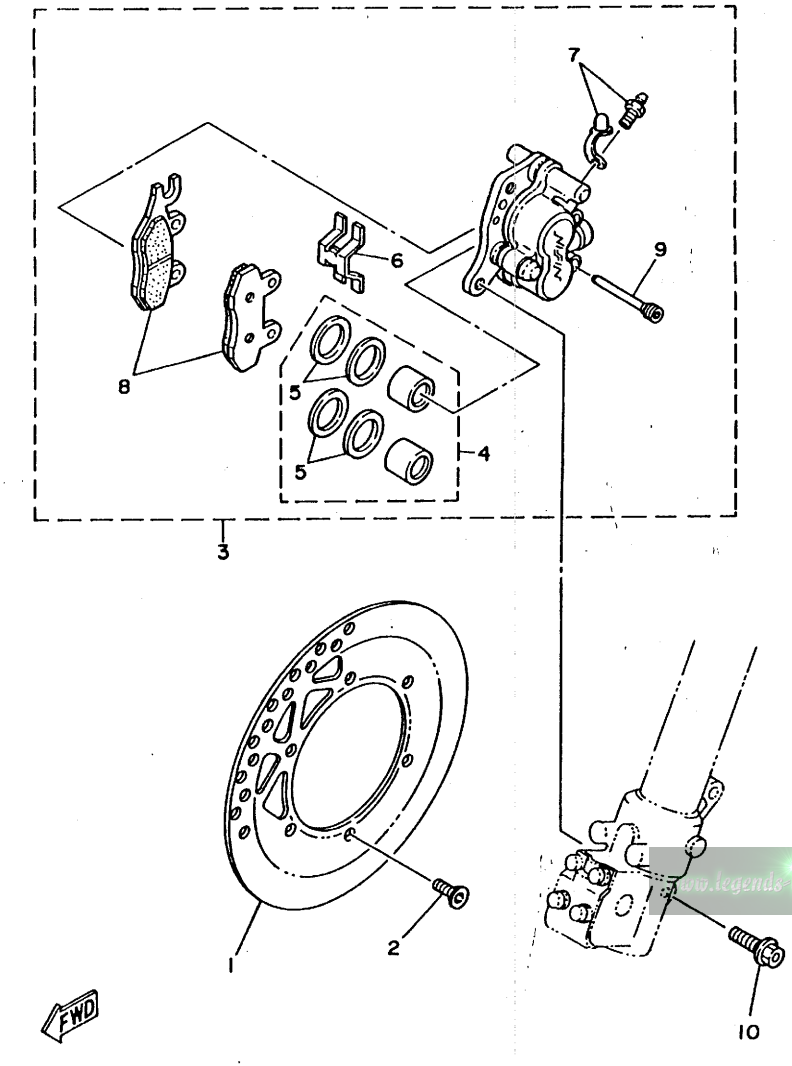

4JY1100-4260

FIG. 26 FRONT BRAKE CALIPER

REF. NO.	PART NO.	DESCRIPTION	Q'TY	REMARKS
1	4JX-2582T-00	DISC, BRAKE	1	
2	90149-06272	SCREW	6	
3	4EW-2580T-01	CALIPER ASSY (LEFT)	1	
4	4EW-W0057-00	.PISTON ASSY, CALIPER	1	
5	3JD-W0047-00	..CALIPER SEAL KIT	1	
6	3SP-25919-00	.SUPPORT, PAD	1	
7	36Y-W0048-00	.BREED SCREW KIT	1	
8	4EW-W0045-01	.BRAKE PAD KIT	1	
9	3GD-25933-00	.PIN, PAD	2	
10	90105-08659	BOLT, WASHER BASED	2	

www.legends-yamaha-enduros.com

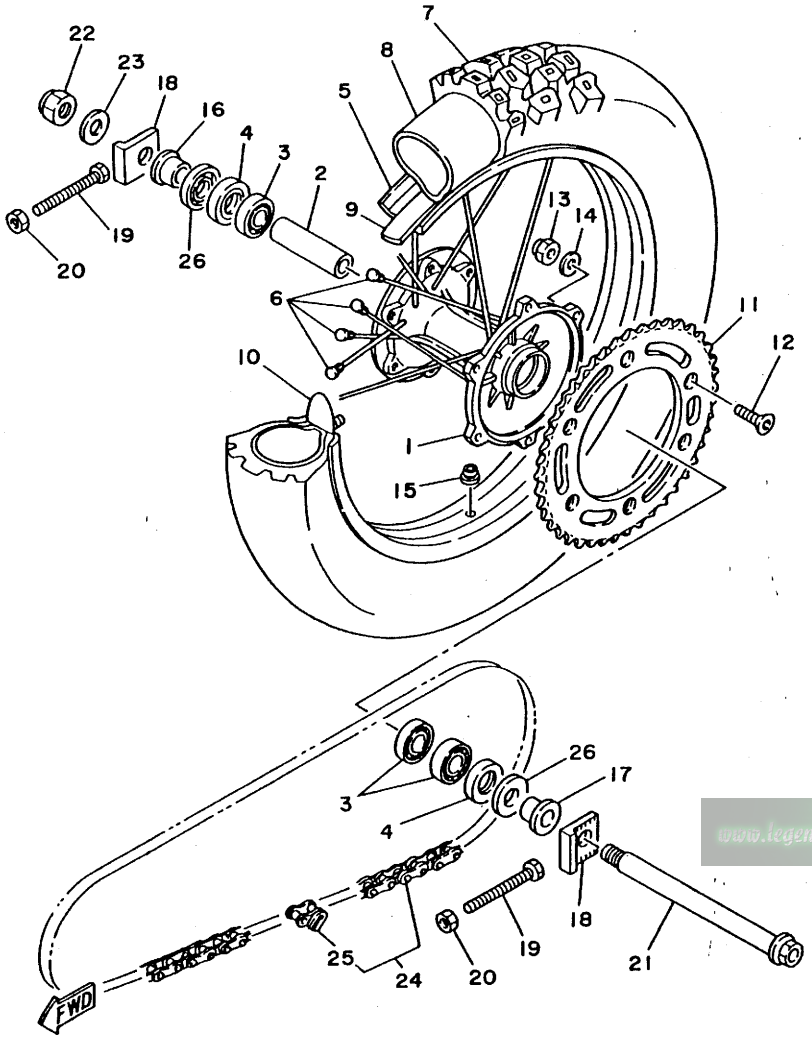

4EW1100-3270

FIG. 27 REAR WHEEL

REF. NO.	PART NO.	DESCRIPTION	Q'TY	REMARKS
1	4EW-25311-00	HUB, REAR	1	
2	4EW-25317-00	SPACER, BEARING	1	
3	93306-00418	BEARING	3	
4	93106-28023	OIL SEAL	2	
5	94418-19485	RIM (1.85-19)	1	
6	4JX-25304-00	SPOKE SET, REAR	1	
7	94110-1900X	TIRE (100/90-19 57M K695)	1	UR DUNLOP
	94110-1902X	TIRE (100/90-19 57M D752)	1	UR DUNLOP FOR EUROPE
8	94210-19224	TUBE (100/90-19 TR4 BTL)	1	DUNLOP
9	94327-19111	BAND, RIM (2.75-19)	1	INOUE
10	2X3-25394-00	SPACER, BEAD	1	
11	39W-25450-00	SPROCKET, DRIVEN (50T)	1	STD
	3JD-25451-01	SPROCKET, DRIVEN (51T)	1	STD FOR EUROPE
	39W-25444-01	SPROCKET, DRIVEN (44T)	1	AP
	39W-25445-01	SPROCKET, DRIVEN (45T)	1	AP
	39W-25446-01	SPROCKET, DRIVEN (46T)	1	AP
	39W-25448-00	SPROCKET, DRIVEN (48T)	1	AP
	2HH-25449-00	SPROCKET, DRIVEN (49T)	1	AP
	39W-25450-00	SPROCKET, DRIVEN (50T)	1	AP
	39W-25452-01	SPROCKET, DRIVEN (52T)	1	AP
12	90109-081G1	BOLT	6	
13	95611-08100	NUT, U	6	
14	90201-086P8	WASHER, PLATE	6	
15	90480-10068	GROMMET	1	
16	90387-2000B	COLLAR	1	
17	90387-2000C	COLLAR	1	
18	4JX-25388-00	PULLER, CHAIN 1	2	
19	90101-08699	BOLT	2	

www.legends-yamaha.com

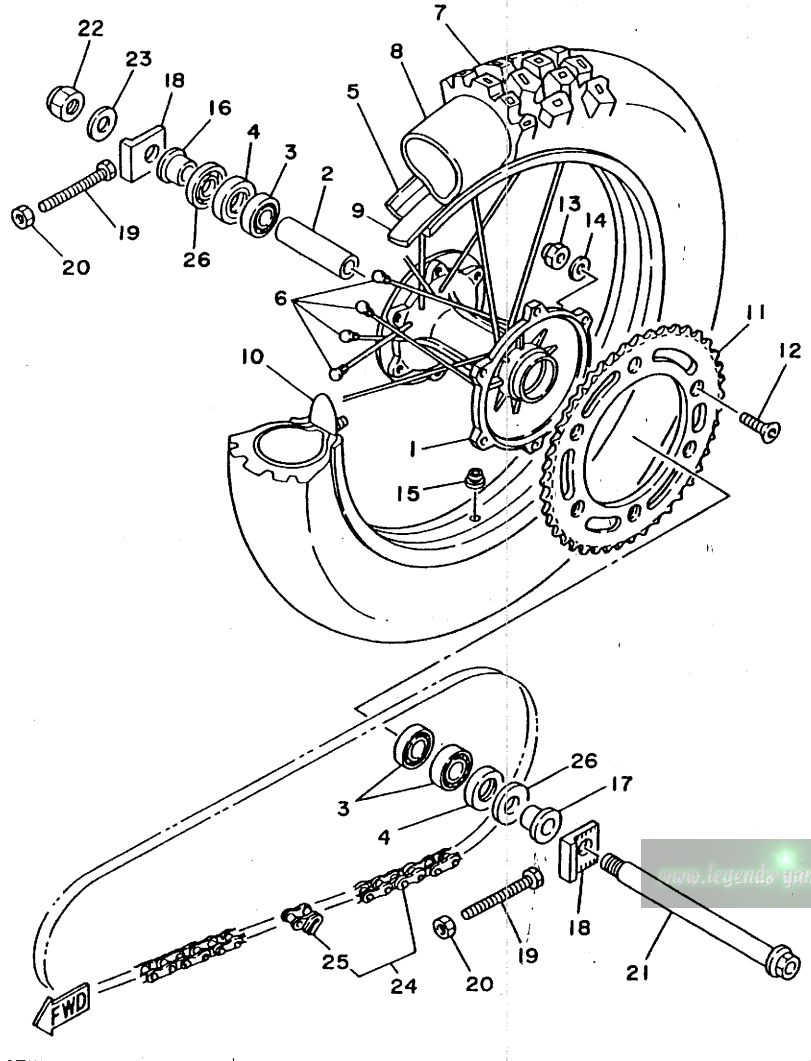

4EW1100-3270

FIG. 27 REAR WHEEL

REF. NO.	PART NO.	DESCRIPTION	Q'TY	REMARKS
20	95701-08500	NUT, FLANGE	2	
21	3JD-25381-01	AXLE, WHEEL	1	
22	90185-18104	NUT, SELF-LOCKING	1	
23	92990-18600	WASHER	1	
24	9Y581-44113	CHAIN (D.I.D.520DS-114LL)	1	UR
	94581-44116	CHAIN (D.I.D.520DS-116LL)	1	UR FOR EUROPE
25	94681-44001	.JOINT, CHAIN	1	
26	4V4-25367-00	COVER, HUB DUST	2	

www.legends-yamaha-enduros.com

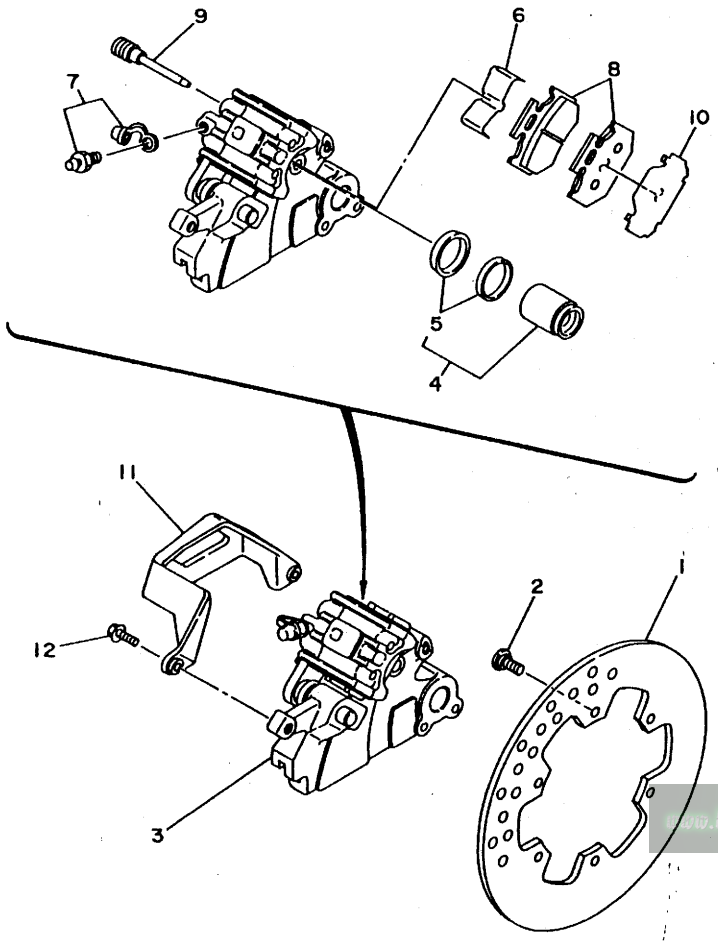

4JX1100-4280

FIG. 28 REAR BRAKE CALIPER

REF. NO.	PART NO.	DESCRIPTION	Q'TY	REMARKS
1	4JX-2582W-00	DISC, REAR BRAKE 2	1	
2	90149-06272	SCREW	6	
3	4GY-2580W-00	CALIPER ASSY, REAR 2	1	
4	3SP-W0057-50	.PISTON ASSY, CALIPER	1	
5	3JD-W0047-50	..CALIPER SEAL KIT	1	
6	4GY-25919-50	.SUPPORT, PAD	1	
7	36Y-W0048-00	.BREED SCREW KIT	1	
8	4GY-W0046-00	.BRAKE PAD KIT 2	1	
9	3SP-25924-51	.PIN, PAD	2	
10	4GY-25827-50	.SHIM, CALIPER	1	
11	4GY-27491-00	PROTECTOR	1	
12	95023-06016	BOLT	2	

www.legends-yamaha-enduros.com

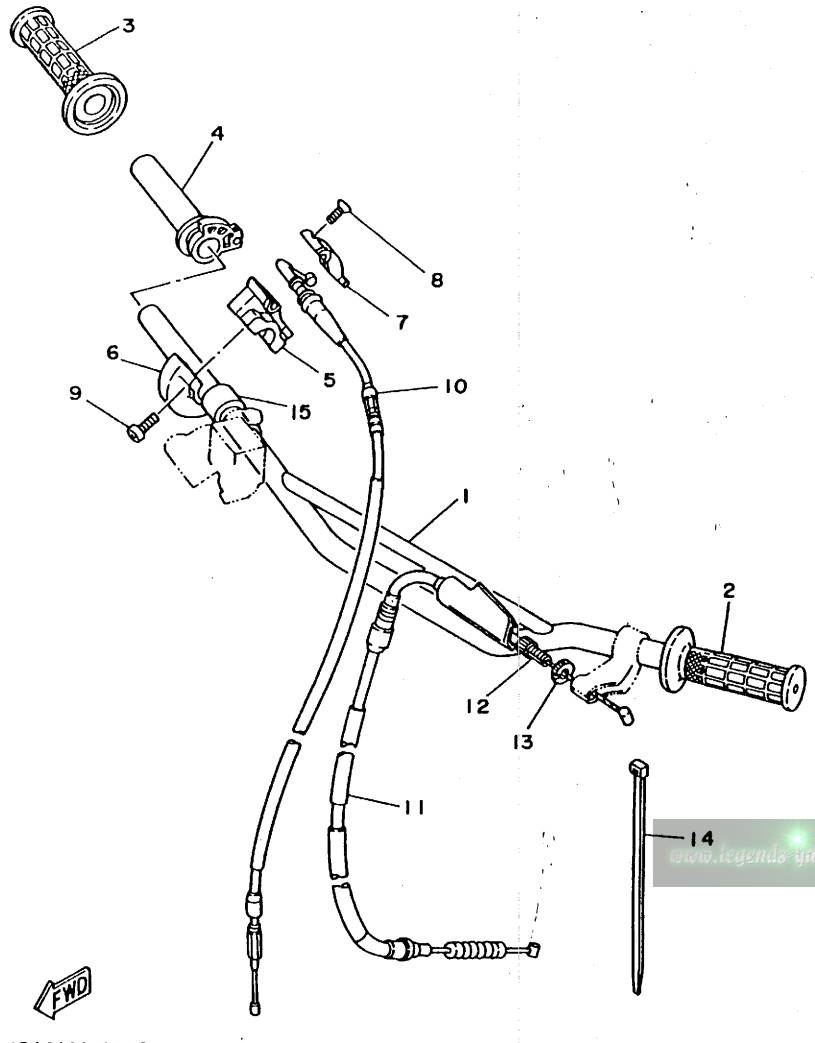

4DA2100-2290

FIG. 29 STEERING HANDLE. CABLE

REF. NO.	PART NO.	DESCRIPTION	Q'TY	REMARKS
1	4JX-26111-00	HANDLEBAR	1	
2	1LX-26241-01	GRIP (LEFT)	1	
3	1LX-26242-01	GRIP (RIGHT)	1	
4	23X-26243-00	TUBE, THROTTLE GUIDE	1	
5	23X-26281-00	CAP, GRIP UPPER	1	
6	431-26282-02	CAP, GRIP LOWER	1	
7	5X2-2628H-01	CAP, WIRE	1	
8	98706-04012	SCREW, FLAT HEAD	2	
9	98586-05016	SCREW, PAN HEAD	2	
10	4EW-26311-00	CABLE, THROTTLE 1	1	
11	4JY-26335-00	CABLE, CLUTCH	1	
12	90123-08090	BOLT	1	
13	90179-08401	NUT	1	
14	90464-14117	CLAMP	1	
15	90560-22281	SPACER	1	

www.legends-yamaha-enduros.com

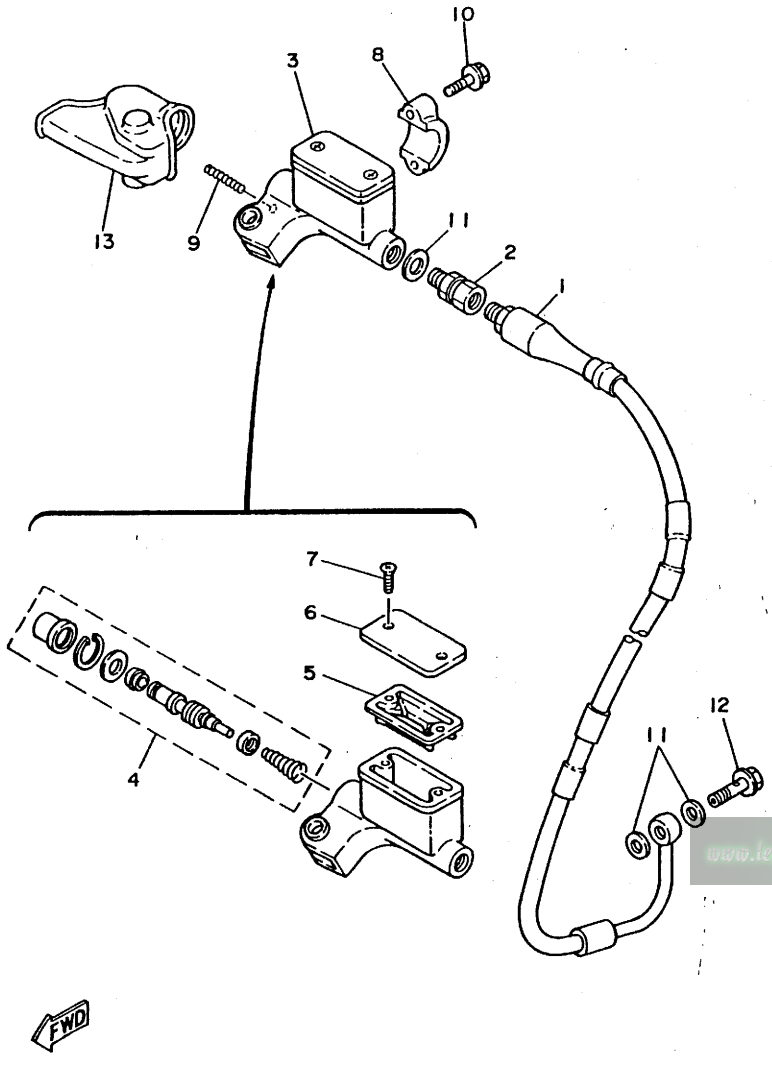

3SP1100-0300

FIG. 30 FRONT MASTER CYLINDER

REF. NO.	PART NO.	DESCRIPTION	Q'TY	REMARKS
1	4DA-25872-00	HOSE, BRAKE 1	1	
2	3LC-25885-00	JOINT	1	
3	3SP-25870-01	MASTER CYLINDER SUB ASSY	1	
4	3SP-W0041-00	.CYLINDER KIT, MASTER	1	
5	56A-25854-00	.DIAPHRAGM, RESERVOIR	1	
6	2VN-25852-01	.CAP, RESERVOIR	1	
7	98706-04012	.SCREW, FLAT HEAD	2	
8	56A-25867-00	BRACKET, MASTER CYLINDER	1	
9	90501-061G2	SPRING, COMPRESSION	1	
10	95026-06025	BOLT, FLANGE	2	
11	90201-10118	WASHER, PLATE	3	
12	90401-10034	BOLT, UNION	1	
13	56A-26372-01	COVER, HANDLE LEVER 1	1	

www.legends-yamaha-enduros.com

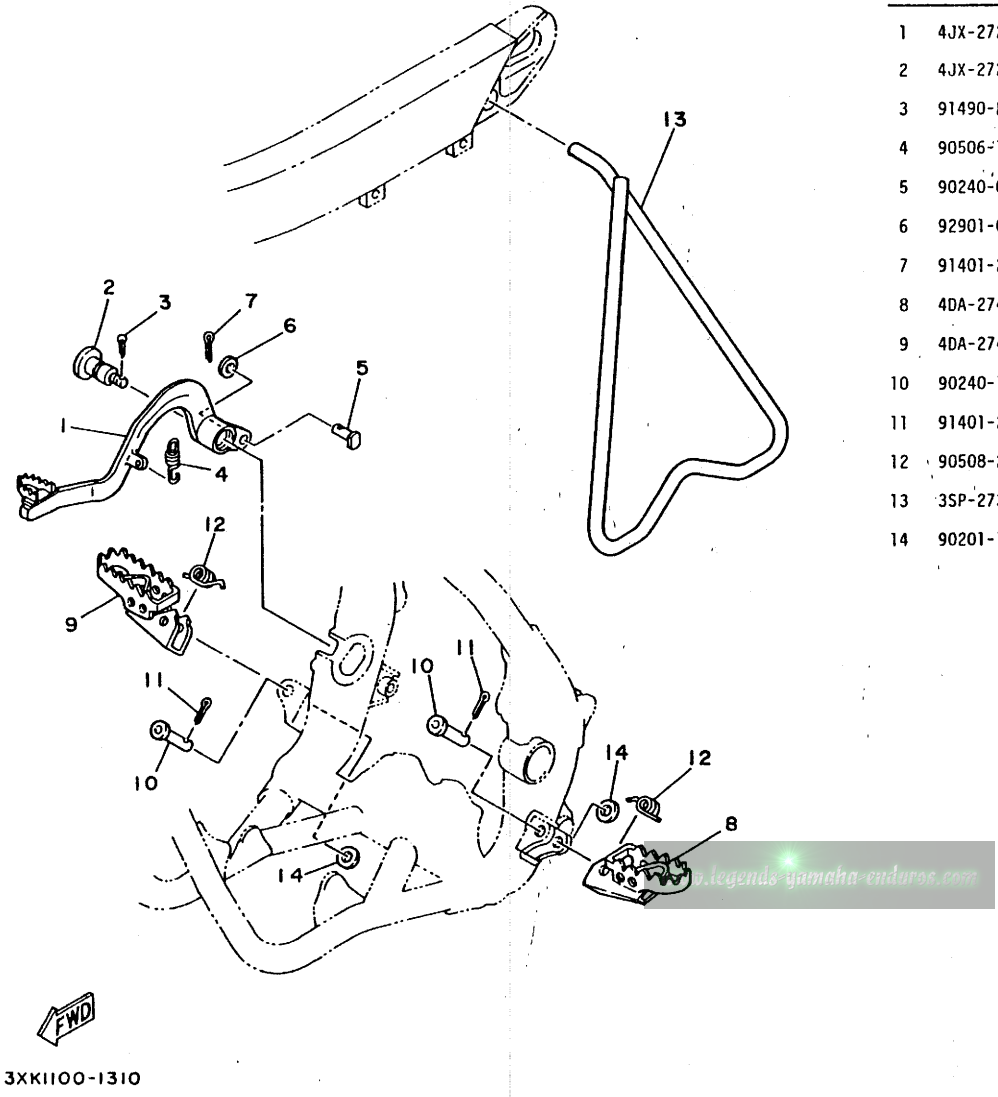

FIG. 31 STAND. FOOTREST

REF. NO.	PART NO.	DESCRIPTION	Q'TY	REMARKS
1	4JX-27200-00	PEDAL, BRAKE	1	
2	4JX-27217-00	BOLT	1	
3	91490-20020	PIN, COTTER	1	
4	90506-15480	SPRING, TENSION	1	
5	90240-08120	PIN, CLEVIS	1	
6	92901-08600	WASHER, PLATE	1	
7	91401-25020	PIN, COTTER	1	
8	4DA-27411-00	FOOTREST 1	1	
9	4DA-27421-00	FOOTREST 2	1	
10	90240-10117	PIN, CLEVIS	2	
11	91401-25020	PIN, COTTER	2	
12	90508-28777	SPRING, TORSION	2	
13	3SP-27311-00	STAND, SIDE	1	
14	90201-10119	WASHER, PLATE	2	

legends-yamaha-enduros.com

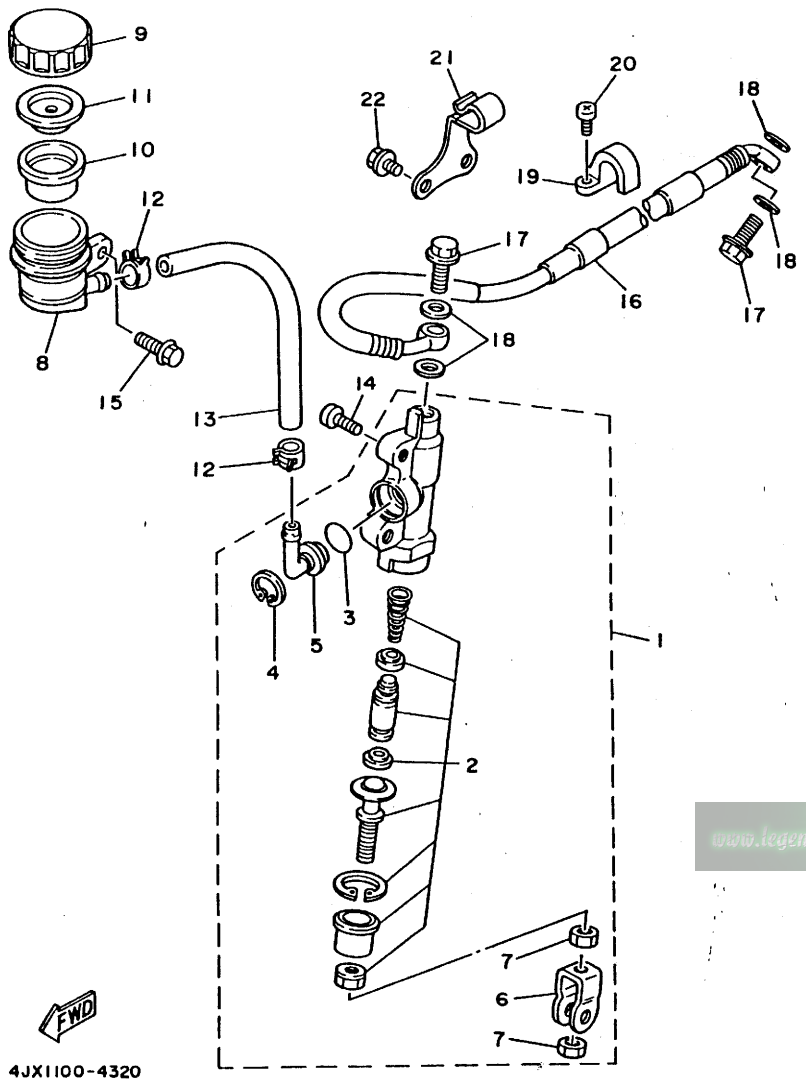

FIG. 32 REAR MASTER CYLINDER

REF. NO.	PART NO.	DESCRIPTION	Q'TY	REMARKS
1	3SP-2583V-00	RR. MASTER CYLINDER ASSY	1	
2	1FK-W0042-50	.CYLINDER KIT, MASTER	1	
3	93210-15620	.O-RING	1	
4	2VN-25866-00	.CIRCLIP	1	
5	2VN-2582A-50	.JOINT	1	
6	3SP-27222-00	.JOINT	1	
7	95333-08600	.NUT	2	
8	4EW-25894-00	TANK, RESERVOIR	1	
9	3XP-25852-50	CAP, RESERVOIR	1	
10	2VN-25854-00	DIAPHRAGM, RESERVOIR	1	
11	2VN-25855-00	BUSH,DIAPHRAGM	1	
12	90467-11044	CLIP	2	
13	90445-137H9	HOSE	1	
14	92013-06016	BOLT	2	
15	95023-06012	BOLT	1	
16	4JX-25873-00	HOSE, BRAKE 2	1	
17	90401-10034	BOLT, UNION	2	
18	90201-10118	WASHER, PLATE	4	
19	2VM-25876-00	HOLDER, BRAKE HOSE 2	1	
20	97780-50110	SCREW, TAPPING	2	
21	90465-12362	CLAMP	1	
22	95023-06008	BOLT	2	

www.legends-yamaha.com

FIG. 33 GENERATOR

REF. NO.	PART NO.	DESCRIPTION	Q'TY	REMARKS
1	4JY-85510-00	STATOR ASSY	1	
2	4JY-85550-00	ROTOR ASSY	1	
3	90149-06011	SCREW	3	
4	95311-10600	NUT	1	
5	90201-10774	WASHER, PLATE	1	

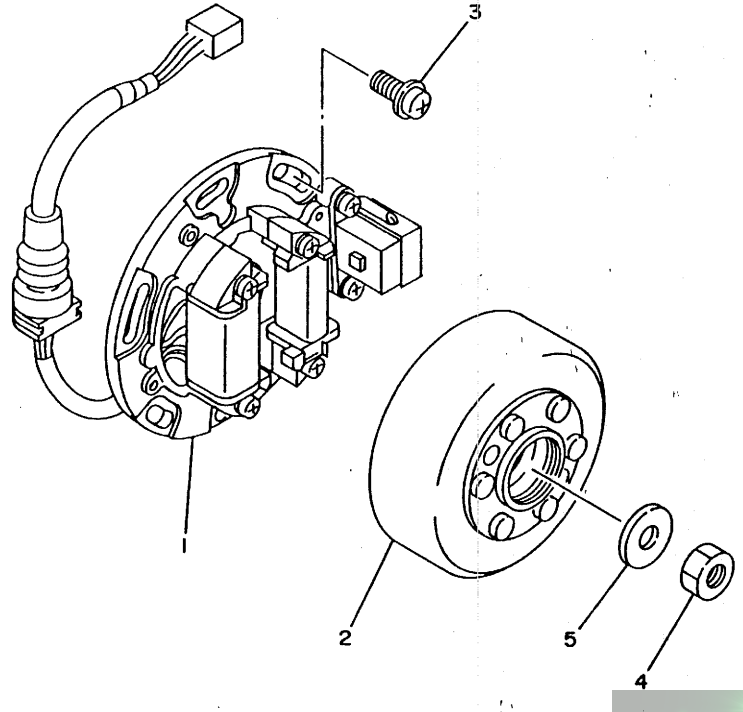

www.legends-yamaha-enduros.com

4JY1100-4330

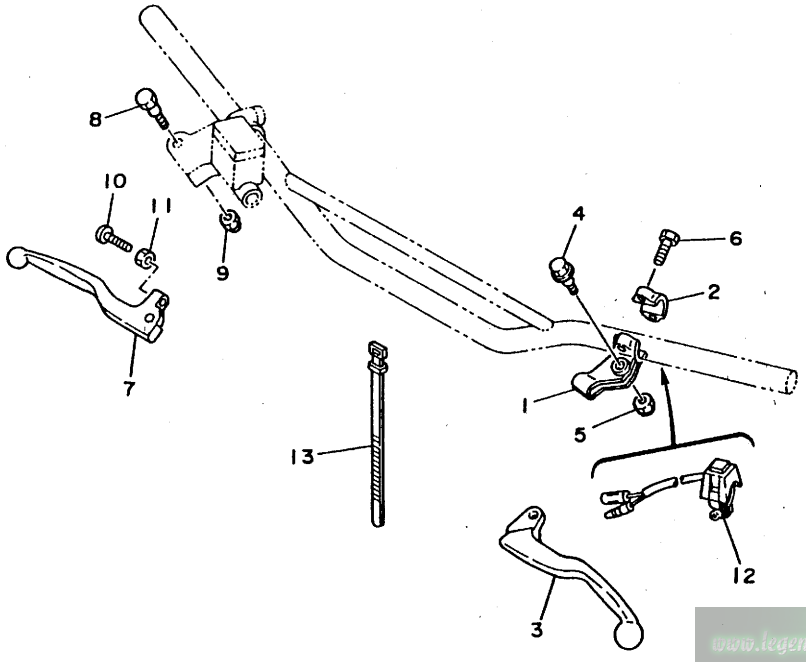

4JX1100-4340

FIG. 34 HANDLE SWITCH. LEVER

REF. NO.	PART NO.	DESCRIPTION	Q'TY	REMARKS
1	38V-82911-00	HOLDER, LEVER 1	1	
2	38V-82913-00	HOLDER, LEVER LOWER 1	1	
3	4GY-83912-00	LEVER 1	1	
4	90109-06799	BOLT	1	
5	95616-06100	NUT, U	1	
6	97006-05016	BOLT	2	
7	3SP-83922-00	LEVER 2	1	
8	90109-06577	BOLT	1	
9	95616-06100	NUT, U	1	
10	90143-06024	SCREW, HEXAGON	1	
11	90170-06010	NUT	1	
12	23X-83976-00	SWITCH, HANDLE 1	1	
13	437-83936-01	BAND, SWITCH CORD	2	

www.legends-yamaha-enduros.com

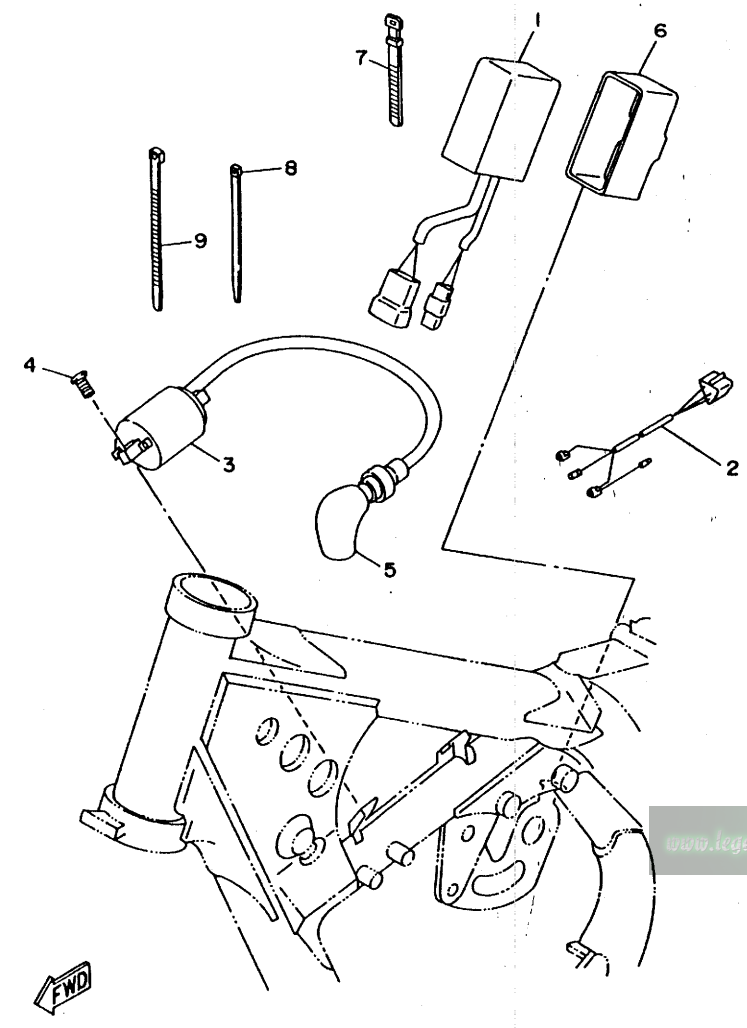

FIG. 35 ELECTRICAL 1

REF. NO.	PART NO.	DESCRIPTION	Q'TY	REMARKS
1	4JY-85540-00	C.D.I. UNIT ASSY	1	
2	4JY-82509-00	WIRE, SUB LEAD	1	
3	4JY-82310-00	IGNITION COIL ASSY	1	
4	91311-05016	BOLT	2	
5	4JY-82370-00	PLUG CAP ASSY	1	
6	4EX-85546-00	BAND	1	
7	25G-83936-01	BAND, SWITCH CORD	1	
8	12R-82591-00	BAND	1	
9	1UA-82591-00	BAND	1	

www.legends-yamaha-enduros.com

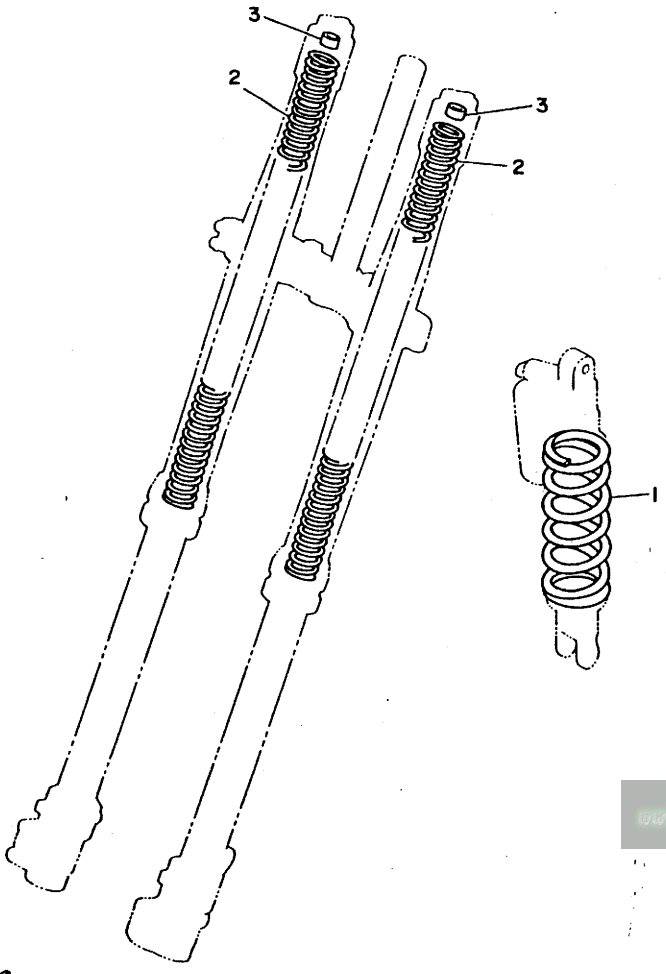

3XJ1100-1360

FIG. 36 ALTERNATE (CHASSIS)

REF. NO.	PART NO.	DESCRIPTION	Q'TY	REMARKS
1	4JX-22212-10	SPRING (K=4.4)	1	AP
	4JX-22212-20	SPRING (K=4.6)	1	AP
	4JX-22212-30	SPRING (K=4.8)	1	AP
	4JX-22212-40	SPRING (K=5.0)	1	AP
	4JX-22212-50	SPRING (K=5.2)	1	AP
	4JX-22212-60	SPRING (K=5.4)	1	AP
2	3XJ-23141-10	SPRING, FRONT FORK (K=0.350)	2	AP
	3XJ-23141-L0	SPRING, FRONT FORK (K=0.365)	2	AP
	3XJ-23141-30	SPRING, FRONT FORK (K=0.380)	2	AP
	3XK-23141-L0	SPRING, FRONT FORK (K=0.390)	2	AP
	3XJ-23141-50	SPRING, FRONT FORK (K=0.400)	2	AP
	3XK-23141-M0	SPRING, FRONT FORK (K=0.410)	2	AP
	3XJ-23141-70	SPRING, FRONT FORK (K=0.420)	2	AP
3	3XJ-23364-L0	COLLAR 2	1	UN

www.legends-yamaha-enduros.com

FIG. 37 REPAIR KIT

REF. NO.	PART NO.	DESCRIPTION	Q'TY	REMARKS
1	4JY-11630-00	PISTON ASSY (STD)	1	
2	4JY-11631-00-B0	.PISTON (STD)	1	ORANGE
3	4JY-11611-00	.RING, PISTON	1	
4	280-11633-00	.PIN, PISTON	1	
5	93450-17129	.CIRCLIP	2	
6	4JY-11650-00	CONNECTING ROD ASSY	1	
7	2HG-11651-01	.ROD, CONNECTING	1	
8	3JD-11681-01	.PIN, CRANK 1	1	
9	90209-22257	.WASHER	2	
10	93310-522P3	.BEARING, CYLINDRICAL	1	
11	93310-216L2	.BEARING, CYLINDRICAL	1	

www.legends-yamaha-enduros.com

PART NO.	GRID NO.
3SP-W0041-00	D-10
1FK-W0042-50	D-12
4EW-W0045-01	D- 5
4GY-W0046-00	D- 8
3JD-W0047-00	D- 5
3JD-W0047-50	D- 8
36Y-W0048-00	D- 5
	D- 8
3SP-W0057-50	D- 8
4EW-W0057-00	D- 5
4JY-11111-00	B- 2
4JY-11166-00	B- 2
4JY-11167-00	B- 2
4JY-1131A-00	B- 2
4JY-1131E-00	B- 2
4JY-1131M-00	B- 2
4JY-1131V-00	B- 2
4JY-11311-00	B- 2
4JY-1132A-00	B- 2
4JY-11351-00	B- 2
4JY-11354-00	B- 2
4JY-11400-00	B- 5
4JY-11412-00	B- 5
4JY-11422-00	B- 5
4JY-11611-00	B- 5
	E- 3
4JY-11630-00	E- 3
4JY-11631-00-A0	B- 5
4JY-11631-00-B0	B- 5
	E- 3
4JY-11631-00-C0	B- 5
4JY-11631-00-D0	B- 5
280-11633-00	B- 5
	E- 3
4JY-11650-00	E- 3
2HG-11651-01	B- 5
	E- 3
3JD-11681-01	B- 5
	E- 3
4JY-11812-00	B- 2
4JY-11832-00	B- 2
4JX-11911-01	B- 4
5X5-11912-01	B- 4
4JY-11915-00	B- 4
5X4-11921-02	B- 4
3JE-11922-00	B- 4
4JY-11931-00	B- 4
4JY-11937-00	B- 4

PART NO.	GRID NO.
5X4-11952-00	B- 4
24X-11953-01	B- 4
4JY-11990-00	B- 4
4JY-11991-00	B- 3
4JY-11993-00	B- 3
4JY-11995-00	B- 3
4EW-1240A-01	B- 7
4JY-12422-00	B- 6
4JY-12428-00	B- 6
1LX-12450-00	B- 6
1LX-12459-00	B- 6
4EX-12461-00	B- 7
22W-12462-00	B- 7
4EX-12469-00	B- 7
4EX-12477-01	B- 7
4DC-1248A-00	B- 7
4EW-12482-01	B- 7
3AK-12483-00	B- 7
4JY-12483-00	B- 7
353-13115-01	B-12
4JY-13565-00	B- 8
4JY-13610-00	B- 8
4JY-13613-00	B- 8
4JY-13616-00	B- 8
4JY-14101-00	B- 9
4JY-14101-10	B- 9
4JY-14101-20	B- 9
3JD-14103-00	B-10
3JD-14104-00	B-10
3JD-14107-35	B-10
3JD-14112-40	B-10
3JD-14112-45	B-10
3JD-14112-50	B-10
3JD-14112-55	B-10
3JD-14112-60	B-10
4DB-14115-00	B- 9
3JD-14116-G0	B- 9
3JD-14116-G1	B- 9
3JD-14116-G2	B- 9
3JD-14116-G3	B- 9
3JD-14116-G4	B- 9
214-14118-00	B- 9
3JD-14131-00	B- 9
3H1-14142-12	B-10
3H1-14142-15	B- 9
3H1-14142-17	B-10
3H1-14142-20	B-10
137-14143-60-A0	B-10

PART NO.	GRID NO.
137-14143-62-A1	B-10
137-14143-64	B-10
137-14143-66-A1	B-10
137-14143-68	B-10
137-14143-70	B-10
137-14143-72	B-10
3JD-14147-00	B- 9
3JE-14147-00	B- 9
3JE-14171-00	B- 9
3XV-14185-00	B- 9
3XV-14185-10	B- 9
353-14186-00	B- 9
363-14187-00	B- 9
3JD-14194-00	B- 9
2HH-14197-00	B- 9
3X3-14197-00	B- 9
4EW-14411-02	B- 8
4EW-14451-00	B- 8
4EX-14453-02	B- 8
3JD-14458-00	B- 8
3JD-14459-00	B- 8
3JD-14462-00	B- 8
3JD-14477-00	B- 8
3JE-14561-00	B- 9
4JY-14610-00	B-11
4JY-14615-00	B-11
4JY-1469A-00	B-11
4JY-14753-00	B-11
565-14771-00	B-11
256-14919-00	B- 9
4JY-15111-00	B-12
4JY-15121-00	B-12
1RG-15363-00	B-13
1LX-15383-00	C- 2
3XJ-15383-00	C- 2
4JY-15411-00	B-13
4JY-15415-00	B-13
4EX-15421-00	B-13
4JY-15431-00	B-13
4JY-15451-00	B-13
4JY-15462-00	B-13
4JY-15463-00	B-13
4DB-15620-03	B-14
4DB-15621-03	B-14
1LX-15641-00	B-14
1LX-15651-00	B-14
1LX-15660-02	B-14
3XJ-16111-00	B-15

PART NO.	GRID NO.
4JY-16150-00	B-15
3XJ-16164-00	B-15
3XJ-16181-00	B-15
3XJ-16321-00	B-15
3XJ-16324-00	B-15
3JD-16340-00	B-15
4EX-16351-00	B-15
3SB-16356-00	B-15
4EX-16371-00	B-15
4EX-16382-00	B-15
3SR-17121-00	C- 2
4EX-17131-00	C- 2
4EX-17151-00	C- 2
4EX-17161-00	C- 2
1LX-17211-01	C- 2
3XJ-17221-00	C- 2
3SR-17231-00	C- 2
4EX-17241-00	C- 2
4EX-17251-00	C- 2
4EX-17261-00	C- 2
3XJ-17411-00	C- 2
137-17417-00-05	B-14
3XJ-17421-00	C- 2
4JY-18101-00	C- 5
1LX-18110-02	C- 5
3XJ-18122-00	C- 5
4JY-18140-00	C- 4
4JY-18172-00	C- 5
3XJ-18173-00	C- 5
3XJ-18178-00	C- 5
3XJ-18182-00	C- 5
3XJ-18184-00	C- 5
4EW-18185-00	C- 5
3JD-18511-01	C- 4
2VN-18512-01	C- 4
1LX-18513-01	C- 4
4EX-18531-00	C- 4
4EX-18535-00	C- 4
4JY-18540-00	C- 4
4JY-21101-00-P0	C- 6
4JY-21190-00-P0	C- 6
46X-21269-00	C-10
4JY-21274-00	C- 6
4JY-21425-00	C- 6
4DA-21511-00	C- 7
4EW-21611-00	C- 7
39X-21642-00	C- 7
4EW-21711-00	C- 8

PART NO.	GRID NO.
4EW-2172A-00	C- 8
	C- 8
4EW-21721-00	C- 8
4JY-2173E-00	C- 8
4JY-2173F-00	C- 8
4EW-21731-00	C- 8
4JX-2174G-00	C- 8
4JX-2174H-00	C- 8
4EW-21741-00	C- 8
3JD-21748-00	C- 7
4EW-22110-02	C- 9
156-22127-00	C- 9
4EW-22128-00	C- 9
4EW-22129-00	C- 9
1LX-22141-00	C- 9
4EW-22151-01	C- 9
4EW-2217A-00	C- 9
4EW-2217F-00	C-10
3JD-22178-10	C- 6
4EW-22178-00	C- 6
4JX-22180-02	C-10
4EW-22199-01	C- 9
4JY-22201-00	C-11
4JY-22201-10	C-11
4JY-22201-20	C-11
4JY-22201-30	C-11
4JY-22210-00	C-11
4JY-22210-10	C-11
4JY-22210-20	C-11
4JY-22210-30	C-11
4JX-22212-10	E- 2
4JX-22212-20	E- 2
4JX-22212-30	C-11
	E- 2
4JX-22212-40	E- 2
4JX-22212-50	E- 2
4JX-22212-60	E- 2
3SP-22213-00	C-11
3JD-22214-00	C-11
3JD-22216-00	C-11
3JD-22224-00	C-11
4JX-22226-00	C-11
3SP-22234-00	C-11
3SP-22241-00	C-11
3XJ-22253-00	C-11
4EW-22253-00	C-11
43M-22274-00	C-11
4JX-22355-01	C- 9

PART NO.	GRID NO.
4EW-22474-00	C-11
3JD-22475-00	C-11
3JE-22475-00	C-11
4JY-23102-L0	C-13
4JY-23102-M0	C-13
4JY-23103-L0	C-14
4JY-23103-M0	C-14
4EW-23110-L0	C-14
4EW-23111-L0	C-13
	C-14
3SP-23113-L0	C-13
	C-14
3JD-2312G-L0	C-13
	C-14
4EW-23120-L0	C-13
4EW-23125-L0	C-13
	C-14
4JX-2313B-00	C-15
4JX-2313C-00	C-15
4JX-23136-L0	C-13
	C-14
4JX-2314A-L0	C-13
	C-14
4JX-2314A-M0	C-13
	C-14
4EW-2314E-L0	C-15
4DA-2314F-L0	C-15
4DA-2314G-L0	C-15
4DA-2314H-L1	C-15
4DA-2314J-L0	C-15
3XJ-23141-L0	E- 2
3XJ-23141-10	E- 2
3XJ-23141-30	E- 2
3XJ-23141-50	E- 2
3XJ-23141-70	E- 2
3XK-23141-L0	C-13
	C-14
	E- 2
3XK-23141-M0	E- 2
4JX-23142-L0	C-13
	C-14
3XJ-23143-L0	C-13
	C-14
4DA-23144-L0	C-13
	C-14
3XJ-23145-L0	C-13
	C-14
4V4-23146-L0	C-13

NUMERICAL INDEX

PART NO.	GRID NO.
4V4-23146-L0	C-14
3JD-23147-L0	C-13
	C-14
3SP-23153-L0	C-13
	C-14
4V4-23153-L0	C-13
	C-14
3JD-23158-L0	C-13
	C-14
4JY-2316A-L0	C-13
	C-14
4JY-2316A-M0	C-13
	C-14
3SP-23166-L0	C-13
	C-14
4EW-23167-L0	C-15
4JX-23170-L0	C-13
	C-14
3XJ-23171-L0	C-13
	C-14
3Y6-23183-00	C-11
24M-23184-00	C-11
4V4-23194-L0	C-15
4EW-2331E-L0	C-15
4JY-23340-L0	C-15
4DA-23346-L0	C-15
3SP-23356-L0	C-15
3SP-23357-L0	C-13
	C-14
4JX-23363-L0	C-13
	C-14
3XJ-23364-L0	E- 2
4DA-23389-00	C-12
3SP-23393-L0	C-13
	C-14
5Y3-23393-00	C-15
4EW-23416-00	C-12
4JX-23435-00	C-12
3SP-23441-00	C-12
4DA-23485-01	C-12
4EW-24110-00	D- 2
4EW-2412F-00	D- 2
24X-24144-00	D- 2
3SP-24173-00	D- 2
22W-24181-00	C- 8
4EW-24181-00	D- 2
4EW-24182-00	D- 2
3JD-24186-00	D- 2

PART NO.	GRID NO.
3XJ-24380-00	D- 2
3JD-24500-01	D- 2
4X8-24512-00	D- 2
3AJ-24534-00	D- 2
5X7-24611-01	D- 2
5X7-24612-00	D- 2
4EW-24728-00	D- 3
4JX-24731-00	D- 3
4EW-24738-00	D- 3
4JX-24770-00	D- 3
4DA-25104-00	D- 4
4EW-25111-00	D- 4
146-25116-00	D- 4
4DA-25181-00	D- 4
4JX-25304-00	D- 6
4EW-25311-00	D- 6
4EW-25317-00	D- 6
4V4-25367-00	D- 7
3JD-25381-01	D- 7
4JX-25388-00	D- 6
2X3-25394-00	D- 6
5X2-25394-00	D- 4
39W-25444-01	D- 6
39W-25445-01	D- 6
39W-25446-01	D- 6
39W-25448-00	D- 6
2HH-25449-00	D- 6
39W-25450-00	D- 6
	D- 6
3JD-25451-01	D- 6
39W-25452-01	D- 6
4EW-2580T-01	D- 5
4GY-2580W-00	D- 8
2VN-2582A-50	D-12
4JX-2582T-00	D- 5
4JX-2582W-00	D- 8
4GY-25827-50	D- 8
3SP-2583V-00	D-12
2VN-25852-01	D-10
3XP-25852-50	D-12
2VN-25854-00	D-12
56A-25854-00	D-10
2VN-25855-00	D-12
2VN-25866-00	D-12
56A-25867-00	D-10
3SP-25870-01	D-10
4DA-25872-00	D-10
4JX-25873-00	D-12

PART NO.	GRID NO.
2VM-25876-00	D-12
3LC-25885-00	D-10
4EW-25894-00	D-12
3SP-25919-00	D- 5
4GY-25919-50	D- 8
3SP-25924-51	D- 8
3GD-25933-00	D- 5
4JX-26111-00	D- 9
1LX-26241-01	D- 9
1LX-26242-01	D- 9
23X-26243-00	D- 9
5X2-2628H-01	D- 9
23X-26281-00	D- 9
431-26282-02	D- 9
4EW-26311-00	D- 9
4JY-26335-00	D- 9
56A-26372-01	D-10
4JX-27200-00	D-11
4JX-27217-00	D-11
3SP-27222-00	D-12
3SP-27311-00	D-11
4DA-27411-00	D-11
4DA-27421-00	D-11
4EW-27491-00	D- 8
56A-28166-00	C- 6
4JY-82310-00	D-15
4JY-82370-00	D-15
4JY-82509-00	D-15
1UA-82591-00	D-15
12R-82591-00	C- 6
	D-15
38V-82911-00	D-14
38V-82913-00	D-14
4GY-83912-00	D-14
3SP-83922-00	D-14
25G-83936-01	D-15
437-83936-01	D-14
23X-83976-00	D-14
4JY-85510-00	D-13
4JY-85540-00	D-15
4EX-85546-00	D-15
4JY-85550-00	D-13
9Y581-44113	D- 7
90101-06664	C- 5
90101-08699	D- 6
90105-05361	C-12
90105-06452	C- 6
90105-06553	B- 8

PART NO.	GRID NO.
90105-08120	C- 6
90105-08659	D- 5
90105-10445	B-15
90105-10614	C-11
90106-08051	C- 6
90109-06418	B-15
90109-06577	D-14
90109-067F4	C- 8
	C- 8
90109-06799	D-14
90109-081G1	D- 6
90109-142F4	C- 9
90109-147F2	C- 9
90110-05201	C- 9
90116-08318	B- 2
90116-08388	B- 2
90116-08394	B- 2
90119-06063	C- 7
90119-06185	B-11
	C- 7
	C- 7
	C-12
90119-06225	C- 8
	C- 8
90122-06035	B- 8
90123-08090	D- 9
90143-06024	D-14
90149-06011	D- 2
	D-13
90149-06272	D- 5
	D- 8
90151-04048	C- 9
90157-06048	B-14
90159-06016	B-15
90159-06078	C- 4
90170-06010	D-14
90170-16326	B-15
90170-24373	C-12
90176-08026	B- 2
90179-06568	C- 9
90179-08401	D- 9
90179-08491	B- 2
90179-16226	C- 3
90179-28650	C-12
90183-06023	C- 7
90183-06069	C- 8
90185-14070	C-10
90185-16127	C- 9

PART NO.	GRID NO.
90185-18104	D- 7
90201-057H5	B- 4
90201-06067	B- 7
90201-065F3	B-14
90201-06571	B- 8
90201-06697	D- 2
90201-067J4	C- 6
90201-080E2	C- 6
90201-08087	B- 2
90201-08326	C- 6
90201-08512	B- 6
90201-086P8	C- 6
	D- 6
90201-08730	C- 6
90201-08784	B- 6
90201-101J1	C- 6
90201-10118	D-10
	D-12
90201-10119	B-15
	D-11
90201-10774	D-13
90201-14740	C-10
90201-154E9	B- 4
90201-15701	C- 2
90201-164H4	C- 9
	C-10
90201-171G4	B-14
90201-204K8	B-15
90201-206K8	C- 2
90201-22555	C- 2
90201-247L2	C-12
90201-286K9	C-12
90202-05187	D- 2
90209-06096	B- 8
90209-18135	C- 2
90209-18208	C- 2
90209-22257	B- 5
	E- 3
90215-16245	B-15
90215-20261	C- 3
90240-08120	D-11
90240-10117	D-11
90280-03017	B- 5
90338-10132	C- 8
90338-10150	C- 9
90340-12097	B-12
90380-16158	C- 9
90387-0600F	C- 8

PART NO.	GRID NO.
90387-0600F	C- 8
	C- 8
	C- 8
90387-0603J	C- 8
	C- 8
90387-063F7	C- 4
90387-063G3	B-11
90387-0700G	B- 7
90387-0701A	C- 7
90387-086N4	C- 6
90387-107R6	B-11
90387-152F2	B- 4
90387-160H4	B-12
90387-164N2	C- 9
90387-164N3	C- 9
90387-167Y9	C- 9
90387-172Y9	D- 4
90387-173Y0	D- 4
90387-2000B	D- 6
90387-2000C	D- 6
90387-202A0	C- 3
90387-202T9	B-15
90401-10034	D-10
	D-12
90430-06014	B-13
	B-15
90430-06166	B- 6
90430-12207	B-12
90445-08605	B-12
90445-09058	D- 2
90445-09100	D- 2
90445-114H6	D- 2
90445-137H9	D-12
90450-15041	B- 7
90450-17036	B- 7
90450-22052	B- 7
90450-28014	B- 7
90450-51070	B- 8
90450-70072	B- 8
90464-14117	D- 2
	D- 9
90465-08336	B-12
90465-12362	D-12
90467-09006	B- 7
90467-10008	D- 2
90467-11044	D-12
90467-12053	B- 2
90468-26048	B-14

NUMERICAL INDEX

PART NO.	GRID NO.
90480-10068	D- 6
90480-10289	B-11
90480-15528	B- 7
90480-16561	B-11
90480-18549	D- 2
90501-052G5	C- 5
90501-061G2	D-10
90501-12081	B-14
90501-23598	B-15
90501-264J6	B- 4
90506-15480	D-11
90507-20052	B-11
90508-14783	B- 4
90508-26450	B-14
90508-26691	C- 4
90508-28777	D-11
90508-295A7	C- 5
90560-08213	B- 4
90560-12280	C- 5
90560-17279	B-14
90560-17379	D- 4
90560-22281	D- 9
91A20-05065	B- 7
91011-10120	C- 6
91311-05016	D-15
91316-04006	B- 4
91316-04008	B- 2
91316-06045	B-12
91316-06055	B-12
91316-06070	B-12
91401-25020	D-11
	D-11
91490-20020	D-11
92013-06016	D-12
92901-05100	B- 4
92901-05600	B- 3
92901-06600	B-11
	B-13
	C-15
92901-08600	D-11
92990-03100	B- 8
	B- 9
92990-04100	B- 9
92990-05100	B- 4
92990-18600	D- 7
92995-06100	B-11
93102-12224	B-15
93102-17263	B-14

PART NO.	GRID NO.
93102-22363	B- 5
93102-26042	C- 2
93103-10168	B- 6
93103-32171	B- 5
93104-08040	B- 2
	B- 4
93106-22019	C- 9
93106-22032	D- 4
93106-28023	D- 6
93109-12012	C- 5
93109-20029	C- 9
	C-10
93210-15171	B-14
93210-15620	D-12
93210-19123	B-13
93210-42728	B-11
93210-63442	B- 2
93210-90785	B- 2
93300-60804	C- 6
93300-60814	B- 4
93306-00316	D- 4
93306-00418	D- 6
93306-20469	C- 2
93306-30411	C- 2
93306-37204	B- 5
93310-216L2	B- 5
	E- 3
93310-225N0	B-15
93310-522P3	B- 5
	E- 3
93311-31567	C- 3
93311-41530	C- 2
93315-11206	B-15
93315-22046	C- 9
	C-10
93317-22262	C- 9
93332-00068	C-12
93332-00078	C-12
93340-21505	B- 4
93342-21013	B-15
93342-22215	C- 9
93410-22039	C- 2
	C- 2
93440-15012	B-14
93450-17129	B- 5
	E- 3
93507-32031	B-14
93521-64032	B- 4

PART NO.	GRID NO.
93603-14179	B- 4
93603-22028	B- 6
93604-10011	B- 6
	B-13
9383A-12017	C- 3
9383A-13031	C- 3
9383A-14054	C- 3
94108-2102V	D- 4
94108-217X2	D- 4
94110-1900X	D- 6
94110-1902X	D- 6
94210-19224	D- 6
94227-21123	D- 4
94307-21145	D- 4
94327-19111	D- 6
94416-21509	D- 4
94418-19485	D- 6
94581-44116	D- 7
94681-44001	D- 7
94702-00325	B- 2
94703-00325	B- 2
95021-06014	C- 8
	C- 8
95021-06045	C- 9
95021-06065	B- 6
95021-08065	C- 6
95023-06008	D-12
95023-06010	B- 6
	B-13
	C- 9
95023-06012	B-11
	C- 8
	C- 8
	D-12
95023-06016	B-11
	C- 7
	D- 2
	D- 3
	D- 8
95023-06020	B- 8
95023-06025	B-11
	B-13
95023-06030	B- 6
	B- 7
	B-13
95023-06035	D- 2
95023-06040	B-13
95023-08035	C-12

PART NO.	GRID NO.
95023-08040	C- 6
	C-12
	C-15
95026-06025	D-10
95311-08700	C- 6
95311-10600	D-13
95333-08600	D-12
95601-05100	B- 8
95611-08100	C- 6
	D- 6
95611-08200	C- 6
95611-10100	C- 6
95611-10200	C-11
95616-06100	D-14
	D-14
95701-08500	D- 7
95811-08050	C- 6
95811-08090	C- 6
97001-05016	B- 3
	B- 4
97006-05016	D-14
97011-06010	B-11
97011-06025	C- 5
97021-06012	B-14
97780-50110	D-12
98503-03008	D- 2
98511-04012	B- 9
98580-03008	B- 8
98580-03010	B- 9
98580-05014	B- 4
98580-06016	B-13
98580-06030	B-13
98586-05016	D- 9
98701-06012	C- 2
	C- 2
98701-06025	D- 2
98706-04012	D- 9
	D-10
98901-05014	B- 3
98903-05010	B- 2
98980-06020	D- 2
99009-10400	B-15
99009-15400	C- 2
99080-07600	B- 6
99510-10114	B- 2
99510-12016	B-12
99530-10014	B-13

PART NO.	GRID NO.

PART NO.	GRID NO.

www.ice-engineering-parts.com

www.legends-yamaha-enduros.com